Seat No.: _____ Enrolment No._____

GUJARAT TECHNOLOGICAL UNIVERSITY

ME – SEMESTER II (OLD) EXAMINATION – SUMMER 2017

Subject Code: 1720801 **Date:09/05/2017**

Subject Name: Finite Element Methods

Time:10:30 A.M. to 01:00 P.M. **Total Marks: 70**

Instructions:

1. **Attempt all questions.**
2. **Make suitable assumptions wherever necessary.**
3. **Figures to the right indicate full marks.**

Q.1 **(a)** Determine the displacement and stress equations in a bar of uniform cross section due to self weight only when hung along its axis from a rigid support. Use three terms (second order) polynomial for obtaining solution using Rayleigh – Ritz method. **06**

(b) For the bar shown in Figure 1 (b) subjected to the linear varying axial load, determine the displacements function using Galerkin's method assuming a cubic polynomial of the formula $u(x) = a_o + a_1x + a_2x^2 + a_3x^3$. Take $AE = 2x10^7$ N. Governing equation can be given as: **08**

AE (du/dx) – P(x) =0. Where A is Area of Cross Section, E is Young's Modulus and P(x) is load.

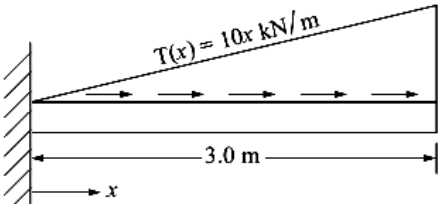

Figure 1 (b)

Q.2 **(a)** 1. Explain following Element Formulation techniques: Isoparametric, Subparametric and Superparametric. **03**

2. With the help of suitable example, explain non linearity resulting because of (1) Geometry (2) Material (3) Boundary Conditions **03**

(b) Find the heat transfer per unit area through the composite wall shown in Figure below. Assume one-dimensional heatflow. Here, k_i = Thermal Conductivity W/m °C and h_i = Thickness of the wall section mm. **08**

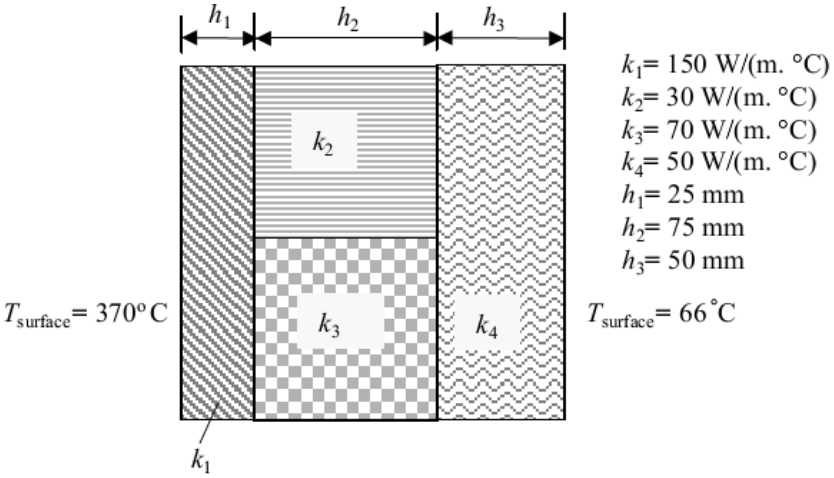

OR

(b) Consider a rod of rectangular cross section subjected to Twisting Torque M (Figure (a)). The height of the cross section is 60 mm and width is 80 mm. Due to the existing symmetry, only quarter of the component is required to be analyzed. The same is modelled with 4 – Triangular Elements (Figure (b)). Develop Element stiffness matrices for the FE model. **08**

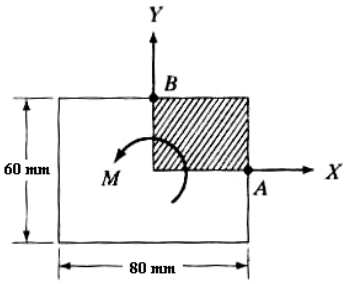

Figure (a)

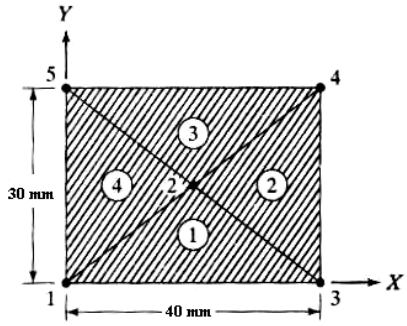

Figure (b)

Q.3 **(a)** Using Subparametric formulation, derive the stiffness matrix of a 3-noded (Quadratic) bar element. Assume area of cross section and Young's modulus to be constant. **06**

(b) For the beam shown below, determine the displacements and the slopes at the nodes, the forces in each element, and the reactions. **08**

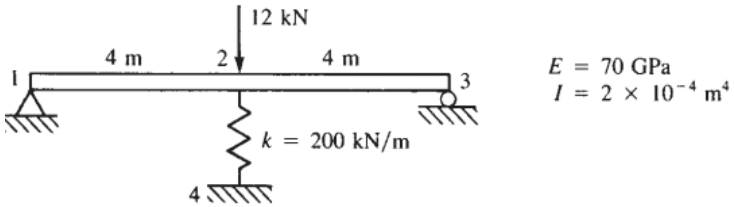

OR

Q.3 **(a)** A rectangular plate 750 mm (width) x 500 mm (height) is modelled by two CST elements. For element 1 nodal coordinates are (0, 0), (750, 0) and (750, 500) while for Element 2 nodal coordinates are (0, 0), (750, 500) and (0, 500). Calculate strain – displacement matrix for both the elements. **06**

(b) Consider a bar of uniform cross-section with its one end fixed. Assume length of the beam to be L, density ρ and Young's modulus E. Estimate the natural frequencies of axial vibration of the bar using both consistent and lumped mass matrices. **08**

Q.4 **(a)**
1. Enlist and draw shape functions of a 4 – node quadrilateral element. **04**
2. Evaluate function f(x) = COS (πx / 2) dx between -1 and 1 using 2 point Guass – quadrature. Take W_1=W_2=1 and X_1= – 0.57735 and X_2= 0.57735. **03**

(b) Determine Jacobian matrix of a 4 – node Quadrilateral Element. **07**

OR

Q.4 **(a)**
1. Vertices of a tetrahedral element are given in sequence as (0, 1, 1), (0, 0, 1), (1, 0, 0) and (0, 0, 0). Determine its Jacobian matrix. **04**
2. Enlist properties of a global stiffness matrix of a bar element. **02**

(b) Determine the nodal displacements of node 2 and node 3. Take P = 100 MN, E_1 = 200 GPa, E_2 = 70 GPa, A_1 = 0.1 m^2 and A_2 = 0.05 m^2. Use penalty stiffness co-efficient C = max of $[K_{ij}]$ x 10^6. **08**

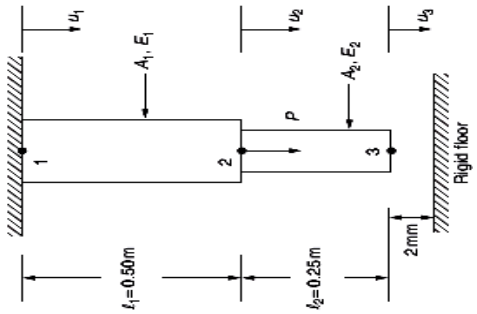

Q.5 **(a)** 1. The quality of the solution of FEA largely depends upon the type, size and number of elements. Justify the statement giving examples. **04**

2. Discuss in detail the importance of convergence in a finite element analysis. **03**

(b) For the plane trusses shown in Figure below, determine the horizontal and vertical displacements of node 1 and the stresses in each element. All elements have E = 210 GPa and A = 4 x 10^{-4} m^2. **07**

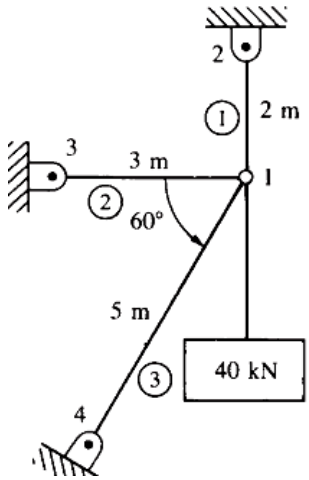

OR

Q.5 **(a)** 1. Discuss significant of a selection of displacement model. **03**

2. Explain Essential Boundary condition and Natural Boundary condition. **04**

(b) A steel (G_s = 77GPa) shaft and an aluminium (G_a = 27 GPa) tube are connected to a fixed support and to a rigid disk, as shown in Figure. If the torque applied at the end is equal to T = 6325 N-m, determine the shear stresses in the steel shaft and aluminium tube. **07**

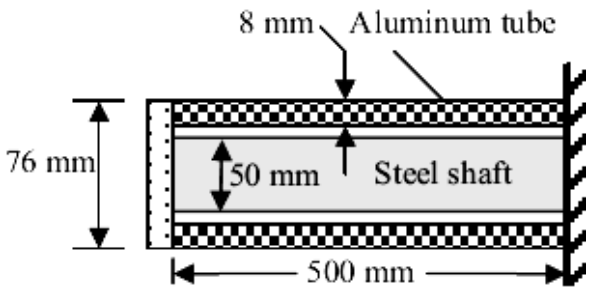

****