Seat No.: _____ Enrolment No._____

GUJARAT TECHNOLOGICAL UNIVERSITY

ME – SEMESTER II (OLD) EXAMINATION – SUMMER 2017

Subject Code:1720802 **Date:10/05/2017**

Subject Name:Computer Aided Manufacturing

Time:10:30 A.M. to 01:00 P.M. **Total Marks: 70**

Instructions:

1. **Attempt all questions.**
2. **Make suitable assumptions wherever necessary.**
3. **Figures to the right indicate full marks.**

Q.1	**(a)**	Briefly explain the basis of designating the co-ordinate axes on CNC machine tools. Explain with neat sketch axes designation for CNC turning centre.	**07**
	(b)	"CNC Machining centre is considered to be a highly productive machine". Give your justification	**07**
Q.2	**(a)**	Explain open loop and closed loop system in CNC machine tools using suitable block diagrams. Differentiate between Point-to-Point (PTP) control and Contouring (C) control of CNC machine tools. Which types of controls are used in a CNC drilling machine and CNC milling machine?	**07**
	(b)	What is the need of an AS/RS? Explain various configurations of AS/RS systems available in an automated industry.	**07**
		OR	
	(b)	What is CIM? Discuss CIM Hardware and Software. Discuss the evolution of CIM with neat sketch and suitable examples.	**07**
Q.3	**(a)**	Describe automatic tool changer with neat sketch.	**07**
	(b)	Write a complete part program for the following component as shown in Figure 1. Using end mill cutter of 20 mm diameter clearly show the axis system chosen with a sketch and direction of the cutter for the motion statements.	**07**

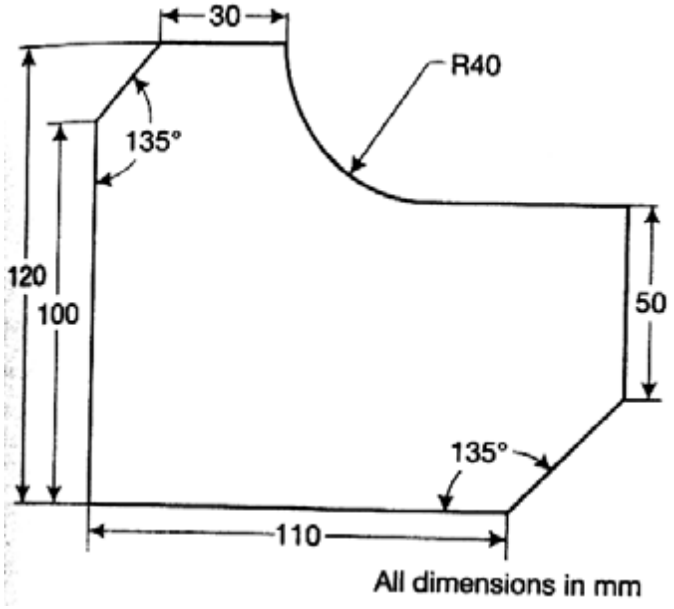

Figure-1

OR

Q.3	**(a)**	Explain with neat sketches the various types of layouts used in FMS design and their applications.	**07**
	(b)	Sketch a simple FMS; discuss its control system & different types of material handling and storage systems.	**07**
Q.4	**(a)**	With neat sketches explain types of tape readers used in NC machine.	**07**

	(b)	Differentiate between Flexible Manufacturing Cell (FMC) and Flexible Manufacturing System (FMS).	**07**

OR

Q.4	**(a)**	Explain the meaning of following terms in context of FMS with suitable examples; 1. Machine Flexibility 2. Routing Flexibility 3. Expansion Flexibility	**07**
	(b)	Write short note on Automated guided vehicles.	**07**
Q.5	**(a)**	What is subroutine? Explain subroutine with suitable example.	**07**
	(b)	For CNC lathe machine, prepare a manual part programming for the component shown in Figure 2.	**07**

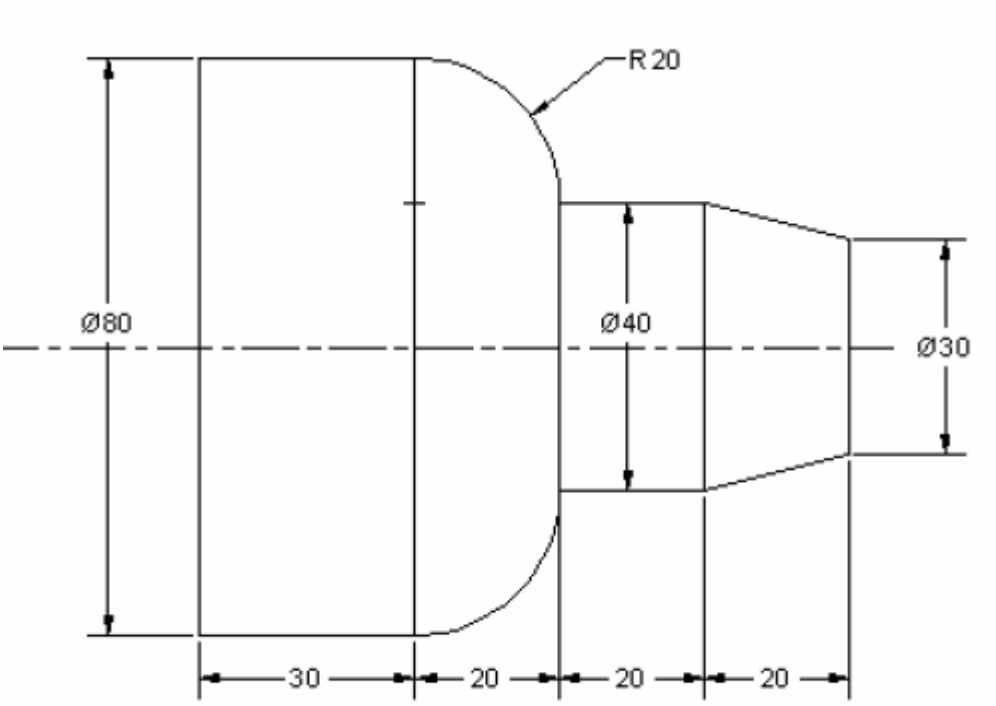

Figure 2

OR

Q.5	**(a)**	Write short note on CMM.	**07**
	(b)	Explain steps involved in CAD to CAM integration. Justify the same with case study.	**07**

****