Seat No.: _____ Enrolment No._____

GUJARAT TECHNOLOGICAL UNIVERSITY

ME SEMESTER – I EXAMINATION – SUMMER 2017

Subject Code: 2710707 **Date:11/05/2017**

Subject Name: Advanced Power System Protection & Switchgear

Time:02:30 p.m. to 05:00 p.m. **Total Marks: 70**

Instructions:

1. **Attempt all questions.**
2. **Make suitable assumptions wherever necessary.**
3. **Figures to the right indicate full marks.**

Q.1 **(a)** What is LINKNET? Discuss LINKNET structure using one example. **07**

(b) Discuss the Aliasing Effect in Numerical relay and how to overcome the Aliasing effect with diagram. **07**

Q.2 **(a)** Explain Least Square Estimation technique is used for digital power system protection. **07**

(b) Using LINKNET structure, find the backup relay for primary relay 7 in the system shown in below figure. **07**

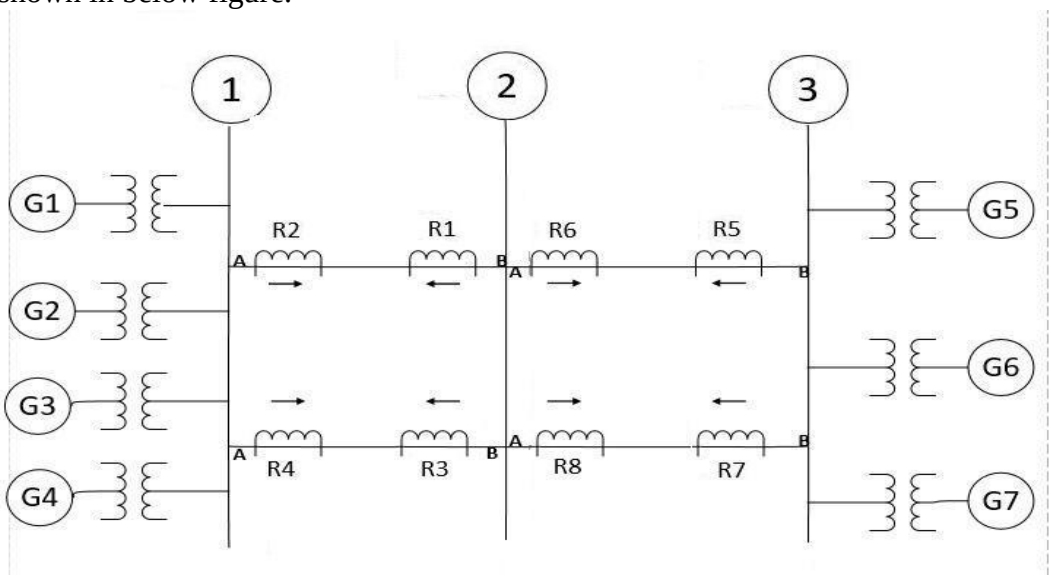

OR

(b) Explain: Successive Approximation A/D converter. **07**

Q.3 **(a)** Discuss how the frequency gets affected due to loss of generators in a system? Why does load shedding become necessary? **07**

(b) Discuss the criteria which must be considered for designing load shedding schemes. **07**

OR

Q.3 **(a)** Discuss methods of islanding and issues related islanding. **07**

(b) Write short note on induction cylinder under frequency relay **07**

Q.4 **(a)** Discuss the following points with respect to reclosing systems. **07**

(1) Instantaneous Trip Lock-out

(2) Synchronism Check

(3) LLDB / LBDL control

(b) Explain the working of single shot solid state reclosing relay. **07**

OR

Q.4	**(a)**	What is reclosing? Explain factors governing application of reclosing.	**07**
	(b)	Explain briefly the Voltage and Angular synchronism check characteristics with respect to reclosing relay	**07**
Q.5	**(a)**	Why series compensation is provided? Discuss briefly fault with un-bypassed series capacitors.	**07**
	(b)	Explain different relaying problems associated with Series Compensated transmission line.	**07**

OR

Q.5	**(a)**	What is the need of Wide area protection? What are WAMS? Explain in brief.	**07**
	(b)	Discuss the concept of Adaptive relaying.	**07**

****