Seat No.: _____ Enrolment No._____

GUJARAT TECHNOLOGICAL UNIVERSITY

ME SEMESTER – I EXAMINATION – SUMMER 2017

Subject Code: 2710907 **Date:11/05/2017**

Subject Name: Advanced Engineering Dynamics

Time:02:30 p.m. to 05:00 p.m. **Total Marks: 70**

Instructions:

1. **Attempt all questions.**
2. **Make suitable assumptions wherever necessary.**
3. **Figures to the right indicate full marks.**

Q.1 (a) Explain the Angular momentum of Rigid bodies. 07

(b) Derive Newton-Euler equation of motion for rigid bodies. 07

Q.2 (a) Discuss; Eulerian Angles. 07

(b) Arm AB is turned by a motor at a constant rate of 1800 rev/min. Cap B connects this bar BC with a fork and clevis joint, and the cap is free to rotate about the AB axis. The connection between bar BC and collar C is a ball-and socket joint. Determine the velocity and acceleration of collar C and the angular velocity and angular acceleration of bar BC when the system is in the position shown in. 07

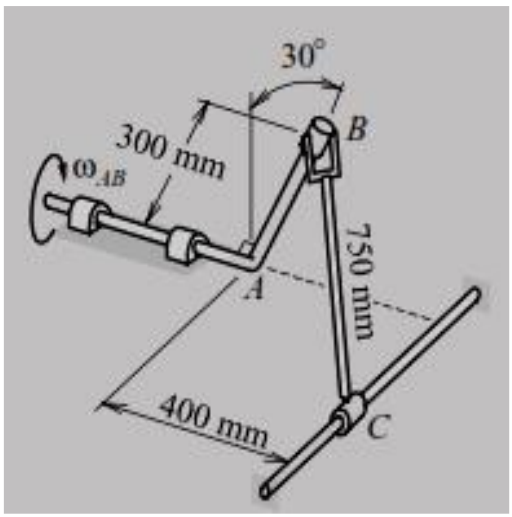

OR

(b) An xyz coordinate system, which initially coincided with a stationary XYZ coordinate system, first undergoes a rotation $\theta_1 = 65^\circ$ about the Y axis, followed by $\theta_2 = -145^\circ$ about the Z axis. Determine 07

(a) the coordinates relative to xyz in its final orientation of a stationary point at X = 2, Y= −4, Z = 3 m;

(b) the coordinates relative to XYZ of the point that remains at x = 2, y = −4, z = 3 m throughout the motion.

Q.3 (a) Discuss the general procedural steps for Newton-Euler Equations of motion. 07

(b) Prove that the virtual work done by the inertia forces is equal to the time rate of change of work done by the momentum minus the virtual change in kinetic energy. 07

OR

Q.3	(a)	Derive the momentum and energy principles for rigid bodies.	07
	(b)	Derive the velocity and acceleration relations for a particle moving on a curved path using (r, θ) coordinate system.	07
Q.4	(a)	The airplane climbs at a constant speed v and at a constant climb angle β. The airplane is being tracked by a radar station at point A on the ground. Determine the radial velocity and angular velocity as a function of the tracking angle θ.	07
	(b)	Force F_1 causes the collar to translate such that its horizontal position x is known as a function of t. force F_2 is known as a function of t. Generalized coordinates are the absolute angle of rotation θ1 for the upper bar and the relative angle θ_2 for the lower bar. Determine the corresponding generalized forces. The weight of each bar is negligible in comparison with the magnitude of F_2.	07

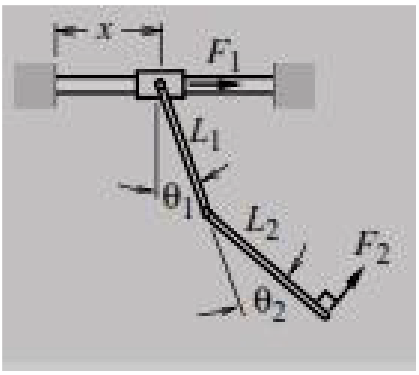

OR

Q.4	(a)	Explain the concept of joint kinematical analysis.	07
	(b)	Discuss the nonholonomic Hamilton principle with suitable example.	07
Q.5	(a)	Explain Lagrange equation with constraints.	07
	(b)	Derive formulation with Quasi-Coordinates.	07

OR

Q.5	(a)	Explain the Hamilton principle.	07
	(b)	Definition of Generalized forces.	07

****