Seat No.: _____ Enrolment No._____

# GUJARAT TECHNOLOGICAL UNIVERSITY

**ME SEMESTER – I EXAMINATION – SUMMER 2017**

**Subject Code:2715002** **Date:09/05/2017**

**Subject Name:CAD/CAM SYSTEMS**

**Time:02:30 p.m. to 05:00 p.m.** **Total Marks: 70**

**Instructions:**

1. **Attempt all questions.**
2. **Make suitable assumptions wherever necessary.**
3. **Figures to the right indicate full marks.**

| | | | |
|---|---|---|---|
| **Q.1** | **(a)** | Draw a diagram of a typical product life cycles. List various CAD/CAM tools used at each stage of design and manufacturing phase of product life cycle. | **07** |
| | **(b)** | What is scan conversion? Explain Bresenham's circle algorithm for scan converting circle. | **07** |
| **Q.2** | **(a)** | **i.** Differentiate between raster scan and vector scan display. | **04** |
| | | **ii.** Compare any three advantage and disadvantage of C-rep and B-rep approaches in solid modelling. | **03** |
| | **(b)** | Find the position of triangle PQR[(2,4),(4,6),(2,6)] after its reflection about a line x-2y=(-4). | **07** |
| | | **OR** | |
| | **(b)** | Prove that the reflection of a square ABCD [(2,2),(4,2),(4,4),(2,4)] about x axis and then rotation of the resulting square about 60° will not be same if the order of transformation is changed. | **07** |
| **Q.3** | **(a)** | Explain parametric representation of an ellipse. | **07** |
| | **(b)** | Explain B-spline curves giving its characteristics. Show blending functions for any one case. | **07** |
| | | **OR** | |
| **Q.3** | **(a)** | Derive equation of Bezier curve with five control points. Explain various properties of Bezier curve. | **07** |
| | **(b)** | What do you mean by curve fitting technique or curve interpolation? Deduce the equation of a Hermite cubic spline curve in matrix form. | **07** |
| **Q.4** | **(a)** | Which are various schemes for solid model representations? Compare constructive solid geometry and boundry representation. | **07** |
| | **(b)** | Write a detail note on wireframe modeling. | **07** |
| | | **OR** | |
| **Q.4** | **(a)** | State advantages and disadvantages of surface models and their use in engineering and design environment. | **07** |
| | **(b)** | Choose a modeling software of your choice, state the modeling technique used and describe the procedure to make the solid model as shown in figure 1. | **07** |

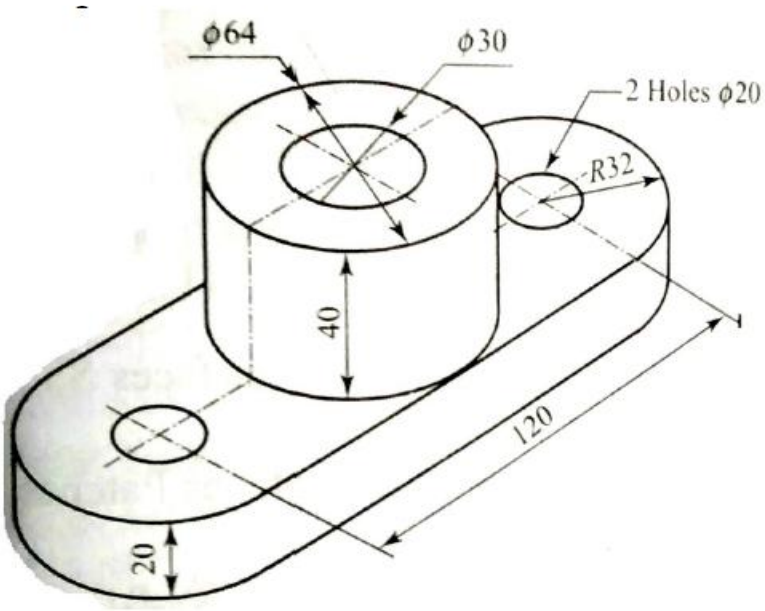


Figure 1

| | | | |
|---|---|---|---|
| **Q.5** | **(a)** | Explain various NC motion control systems. | **07** |
| | **(b)** | How can optimization be carried out using CAD? Give your views. | **07** |

**OR**

| | | | |
|---|---|---|---|
| **Q.5** | **(a)** | Explain the role of CAD while from process planning to actual machining. | **07** |
| | **(b)** | Explain the principle of concurrent engineering. | |

**********