Seat No.: _____ Enrolment No._____

GUJARAT TECHNOLOGICAL UNIVERSITY

ME SEMESTER II EXAMINATION – SUMMER 2017

Subject Code: 2723012 **Date:30/05/2017**

Subject Name: Advance Processed Synthesis

Time:02:30 PM to 05:00 PM **Total Marks: 70**

Instructions:

1. **Attempt all questions.**
2. **Make suitable assumptions wherever necessary.**
3. **Figures to the right indicate full marks.**

Q.1 (a) Write step by step procedure to find out optimum value of ΔT_{min} for heat exchanger network synthesis problem. 05

(b) Based on the information for the streams and utilities given below, plot HCC curve and do estimation of costs to find out optimum approach temperature for the network. Use $\Delta T_{min} = 10$ °C. 09

Stream	T_{in} °C	T_{out} °C	FC_p kW/°C	h W/m^2 °C
C1	60	180	300	600
C2	30	105	260	600
H1	180	40	200	700
H2	150	40	400	800
Steam	230	230	-	5000
CW	25	32	-	600

Q.2 (a) Find out the best possible solution for HENS and determine minimum number of heat exchanger required assuming $\Delta T = 20$ ° C. 07

	FCp (MW/K)	Tin (°K)	Tout (°K)	Cost
H1	3	600	200	0
C1	1	100	580	0
C2	2	100	580	0
Steam	-	650	650	High
Hot water	-	250	>130	Low
CW	-	80	<125	Moderate

(b) Write a short note on reducing the number of heat exchanger by breaking heat loops. 07

OR

(b) Write a short note on reducing the number of heat exchanger by stream splitting. 07

Q.3 (a) Write a short note on Criteria for selection of separation method. 07

(b) Write the heuristics for determining favorable sequence of distillation column. 07

OR

Q.3 (a) Draw the five possible sequences of distillation column for four component separations. 07

(b) Explain Marginal vapor rate method. 07

Answer Q. 4 based on following:

The process in Figure below is being designed to remove H_2S from sour coke oven gas (COG), which is a mixture of H_2, CH_4, CO, N_2, NH_3, CO_2, and H_2S. The removal is necessary because H_2S is corrosive and becomes the pollutant SO_2 when the gas is combusted. It is proposed to remove the H_2S and send it to a Claus unit to convert it to sulfur. However, because the conversion of the H_2S is incomplete, the tail gases must be recycled for H_2S removal. Distillation to remove the H_2S is not feasible, but absorption is feasible. Thus, it is proposed to design a MEN based on absorption. One possible MSA is aqueous ammonia, noting that ammonia is already present in the COG and that the flow rate and composition of the recycle stream are specified before the HEN is designed. An alternative MSA is chilled methanol, which is an external MSA. Both ammonia and chilled methanol are to be considered as possible absorbents for the removal of H_2S from the COG and the tail gas. As shown in Figure below, the rich absorbent streams are regenerated by stripping to recover the acid gases, which are sent to the Claus unit.

To begin the development of the MEN, the sour COG and the tail gases are not mixed, and absorption can utilize ammonia, methanol, or both. Mass transfer in all mass exchangers is from the gas phase to the liquid phase.

The specifications for the rich and lean streams are as follows, where compositions, y for gases and x for liquids, are in mass fractions, F is the stream mass flow rate, and n is the mass flow rate of H_2S transferred to or from the stream:

Stream	y^s or x^s	y^t or x^t	$F\ (kg/s)$	$n\ (kg/s)$
R1 (COG)	0.0700	0.0005	0.9	0.06255
R2 (Tail Gases)	0.0510	0.0003	0.1	0.00507
L1(Aq. NH_3)	0.0008	0.0310	2.3	0.06946
L2 (Methanol)	0.0001	0.0035	Unlimited	Unlimited

Note that the flow rate of aqueous ammonia is limited, but chilled methanol is considered to be available in unlimited amounts. Note, also that the total amount of H_2S to be transferred to the absorbent(s) is 0.06255 + 0.00507 = 0.06762 kg/s. This is less than the capacity of the aqueous ammonia. However, as in heat exchange, where a driving force is necessary to transfer the heat, mass exchange also requires a driving force and, at this point in the synthesis, it is not known whether sufficient mass-transfer driving forces exist to utilize the capacity of the aqueous ammonia. If not, then the use of chilled methanol must be considered.

All conditions in the above specifications table are considered to be dilute in the solute, H_2S. Therefore, stream flow rates are assumed constant and at the expected operating conditions of temperature and pressure, the following linear equilibrium equations apply:

Aqueous ammonia (1), $y = m_1 x = 1.45x$

Chilled methanol (2), $y = m_2 x = 0.26x$

For concentrated solutes, it is preferable to use solute-free flow rates and the mass ratios of solute to solute-free solvent.

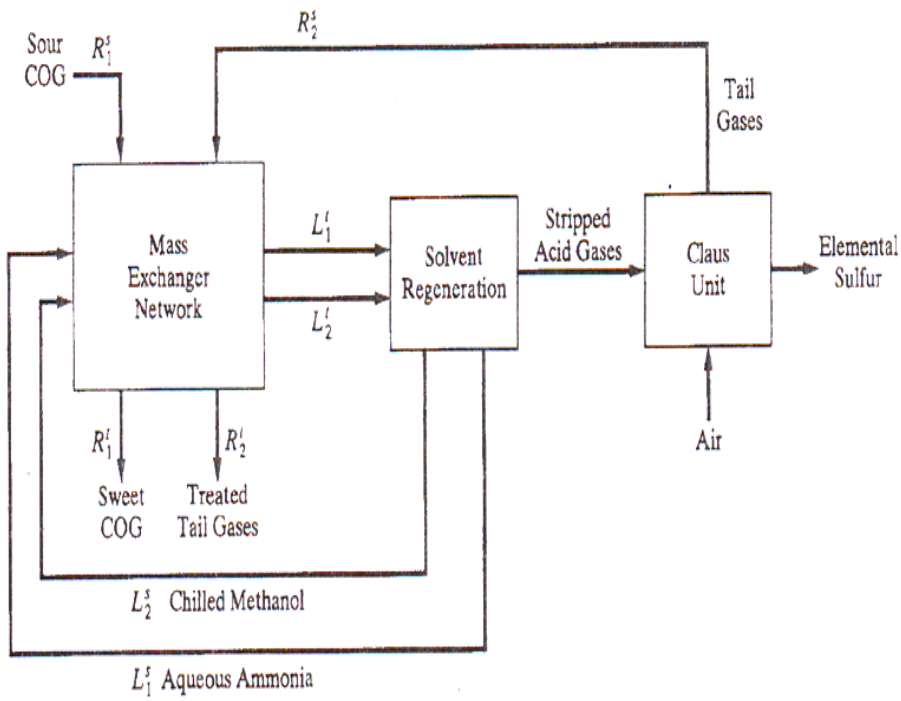

At this stage in process synthesis, it is desired to determine, by the CI method, the minimum amount of chilled methanol required for a MEN involving these four streams, noting that it may be possible to eliminate the need for chilled methanol. Matched the COG and lean gas streams with the aqueous ammonia stream. $\Delta x_{min} = 0.0001$

		Or	
Q-4	(a)	Rank order the source and target mass Fraction	07
	(b)	Prepare a Cascade of composition interval	07
Q-5	(a)	Summarize solute load to be added or removed	07
	(b)	Draw a pinch decomposition of the rich and lean stream	07
		Or	
Q-5	(a)	Write note on reactor network design using the attainable region	07
		Write a single note on single product processing sequence for batch processing scheduling.	07