Seat No.: _____ Enrolment No._____

GUJARAT TECHNOLOGICAL UNIVERSITY

M. E. - SEMESTER – II • EXAMINATION – SUMMER • 2013

Subject code: 1720906 **Date: 05-06-2013**
Subject Name: Robotics
Time: 10.30 am – 01.00 pm **Total Marks: 70**

Instructions:

1. **Attempt all questions.**
2. **Make suitable assumptions wherever necessary.**
3. **Figures to the right indicate full marks.**

Q.1 **(a)** Write a short note on sensors required in arc welding. **07**
(b) Describe different Euler angle representation Systems. **07**

Q.2 **(a)** Referring to figure derive the homogeneous transformation matrix of ${}^{A}T_{B}$, ${}^{B}T_{C}$ AND ${}^{A}T_{C}$. **07**

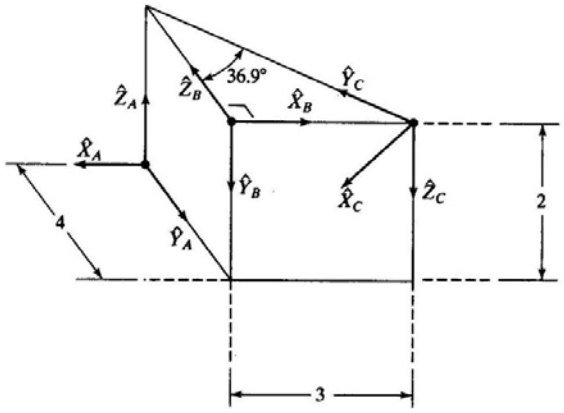

(b) What is compliance? Give detail idea about Remote Center Compliance device. **07**

OR

(b) Give name of range sensing technique and describe any one of them in detail. **07**

Q.3 **(a)** Describe different types of automatic assembly configurations. **07**
(b) Explain the types of controller for robot motion control. **07**

OR

Q.3 **(a)** Give detailed information about different types of work envelops. **07**
(b) Explain three levels of safety sensor system and different gardening methods. **07**

Q.4 **(a)** Derive the expression for the rotary joint Jacobian. **07**
(b) Obtain the general inverse kinematics model solution for the 2-DOF Roll and pitch wrist configuration. **07**

OR

Q.4 **(a)** How velocity propagates along links? **07**
(b) Describe different Joint-Link Parameters of the link. **07**

Q.5 Derive final position matrix of end point for 3-DOF (RRP) manipulator shown in figure. Take $l_1=100\ mm$, $l_2 = 150\ mm$. **14**

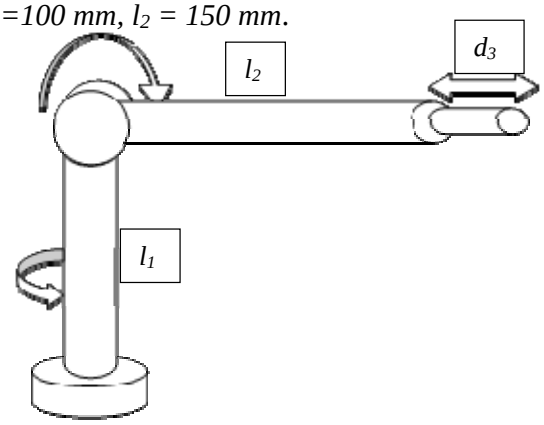

OR

Q.5 For manipulator shown in figure below, obtain the Jacobian matrix. **14**

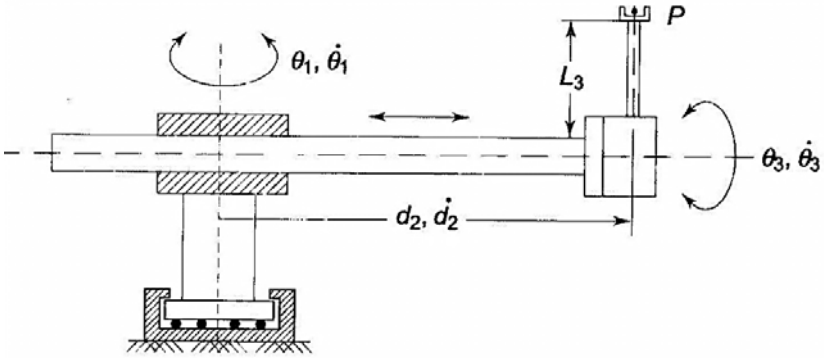

****