Seat No.: _____ Enrolment No._____

GUJARAT TECHNOLOGICAL UNIVERSITY

M. E. - SEMESTER – I • EXAMINATION – SUMMER • 2013

Subject code: 711104N **Date: 06-06-2013**

Subject Name: Modeling, Simulation and Computer Application

Time: 10.30 am – 01.00 pm **Total Marks: 70**

Instructions:

1. **Attempt all questions.**
2. **Make suitable assumptions wherever necessary.**
3. **Figures to the right indicate full marks.**

Q.1	**(a)**	Explain system modeling and simulation as applied to Mechanical Engineering.	**07**
	(b)	Classify system variables and write their relative importance.	**07**
Q.2	**(a)**	When are we forced to use analogy? Explain in brief with examples.	**07**
	(b)	What are random variables? Explain their significance.	**07**
		OR	
	(b)	A practical system is simplified as shown in figure 1; develop a model using blocks available in MATLAB SIMULINK. And write the commands to be given at command window for running successful running of program.	**07**
Q.3	**(a)**	Explain RLC circuit and its importance. Write a program for showing the effect of circuit parameters. Give resembling practical system.	**07**
	(b)	Classify different models. Explain the importance of each model with respect to their characteristics.	**07**
		OR	
Q.3	**(a)**	Give different models for generating random variables.	**07**
	(b)	What are different simulation tools available? Give basic features that are required in any simulation tool.	**07**
Q.4	**(a)**	For modeling mechanical systems, describe idealized translational and rotational passive elements. Mention only governing equations clearly with appropriate sketches.	**07**
	(b)	Explain use of probability in simulation. Describe the following probability density function and cumulative distribution function: (i) Poissonôs distribution and (ii) Gamma distribution.	**07**
		OR	
Q.4	**(a)**	Give detailed classification of (i) Systems and (ii) Models.	**07**
	(b)	Model and simulate a mechanical accelerometer and which is mounted on a jet engine test sled. Show clearly the characteristics of the accelerometer and mention how we can reduce the response time.	**07**
Q.5	**(a)**	Describe the analysis and simulation of Linear and Non-linear systems.	**07**
	(b)	Give transfer function form of a second order differential equation representing a damped system.	**07**
		OR	
Q.5	**(a)**	For the truck trailer system shown in figure-3, write system equations and hence get only the transfer function form, if mass of truck is M_1.	**07**
	(b)	Write a short note on Lumped and distributed system.	**07**

****

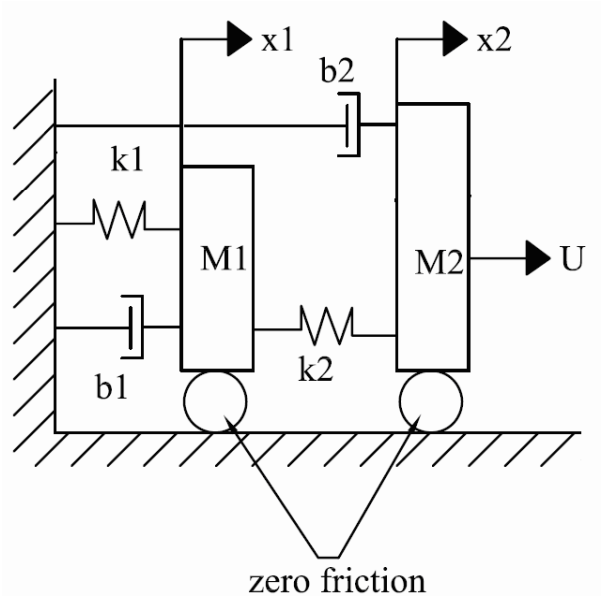

Figure -1 [Q-2 (b)]

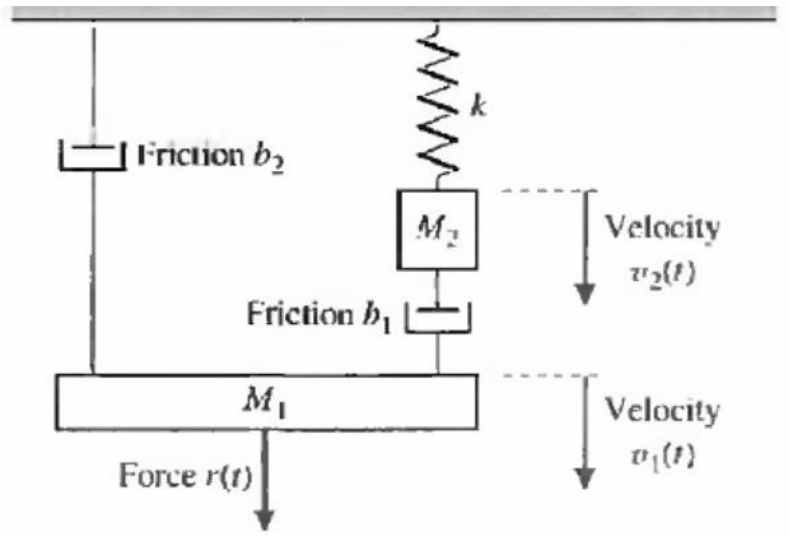

Figure -2 [Q-4 (b) OR]

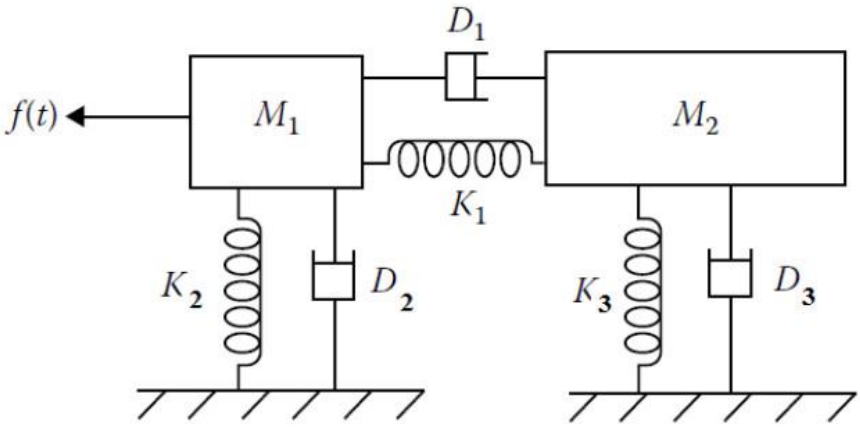

Figure -3 [Q-5 (a) OR]