Seat No.: _____ Enrolment No._____

GUJARAT TECHNOLOGICAL UNIVERSITY

M. E. - SEMESTER – I • EXAMINATION – SUMMER • 2013

Subject code: 712005N **Date: 06-06-2013**

Subject Name: Basic Concepts of Structural Behaviour

Time: 10.30 am – 01.00 pm **Total Marks: 70**

Instructions:

1. **Attempt all questions.**
2. **Make suitable assumptions wherever necessary.**
3. **Figures to the right indicate full marks.**

Q.1 **(a)** Explain various types of loads which are to be considered in the analysis and design of structures. **07**

(b) Explain steps to design a column and importance of end support conditions in the design of a column. **07**

Q.2 **(a)** Determine support reactions for an overhanging beam loaded as shown in fig.1 **07**

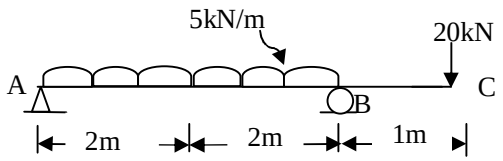

Fig.1

(b) What are the different types of structural failure and discuss the methods to prevent them. **07**

OR

(b) Explain cable structures and Arches giving examples with neat sketches **07**

Q.3 **(a)** Explain behavioral pattern of structural members in different types of forces such as Tension, compression, bending, and torsion. **07**

(b) Explain stress and strain in general. What are the different types of stresses and strains. **07**

OR

Q.3 **(a)** A simply supported beam is of length 6.0m carries a uniformly distributed load of 5kN/m over the entire length and a concentrated load of 15kN at mid span. Draw shear force and bending moment diagrams for the beam. **07**

(b) Draw deflected shapes of the following beams: **07**

- Cantilever beam with udl over entire length
- A beam with overhanging from both the sides with udl
- A three span continuous beam with udl.

Q.4 **(a)** Determine the member forces in the truss shown in fig.2, using a joint equilibrium approach. **07**

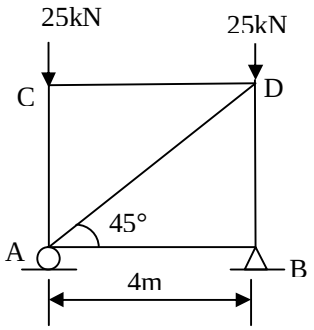

Fig.2

(b) Discuss Advantages and disadvantages of load bearing and framed structures. **07**

OR

Q.4 **(a)** How the modeling of structures and the external loads are done for the purpose of analysis and design. **07**

(b) Draw bending stress and shear stress distribution in the beam of cross-section: T-shape, H-shape and I-shape. **07**

Q.5 **(a)** Write short note on Plates and grids. **07**

(b) Draw Stress ï strain graph for mild steel bar under the axial tensile force showing all important points and explain the behavior. **07**

OR

Q.5 **(a)** Classify structures in general with neat sketches. **07**

(b) Explain importance of forces, moments, equilibrium and free-body diagrams in analysis and design of structures. **07**

****