Seat No.: _____ Enrolment No._____

GUJARAT TECHNOLOGICAL UNIVERSITY

M. E. - SEMESTER – II • EXAMINATION – SUMMER • 2014

Subject code: 1720302 **Date: 18-06-2014**

Subject Name: Advance Instrumentation

Time: 02:30 pm - 05:00 pm **Total Marks: 70**

Instructions:

1. **Attempt all questions.**
2. **Make suitable assumptions wherever necessary.**
3. **Figures to the right indicate full marks.**

Q.1	**(a)**	What is the significance of Instrumentation amplifier? Discuss the various configuration of instrumentation amplifier.	**07**
	(b)	Explain transducer bridge amplifiers in detail.	**07**
Q.2	**(a)**	Draw and explain differentiating circuit with output equation and input-output waveform.	**07**
	(b)	Describe voltage to current converter with floating and grounded load.	**07**
	(b)	Derive an equation for output impendence of non-inverting operational amplifier.	**07**
Q.3	**(a)**	Explain Tow-Thomas filter with its neat circuit diagram.	**07**
	(b)	In the circuit shown in fig (1), let R = 100 KÝ, C =1nF, and $V_O(0)$ = 0V. Assuming an op-amp with I_B = 50 nA, I_{OS} = 20 nA, and $\pm V_{sat}$ = ±15V. Find how long it takes for the opamp to enter saturation if (a) R_p = 0 and (b) R_p = R	**07**

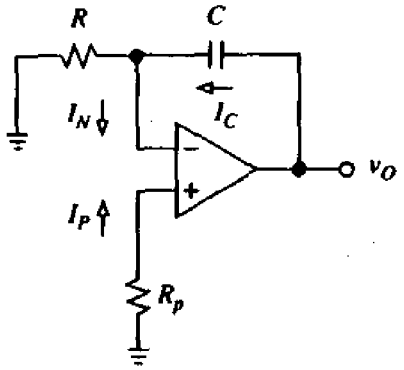

Q.3	**(a)**	Design a multiple feedback band-pass filter with f_0 = 2KHz, Q=10, and H_0 = 30DB. Also draw the circuit.	**07**
	(b)	Draw and explain band pass KRC filter with its equation with Q factor.	**07**
Q.4	**(a)**	Explain the significance of SC (Switched Capacitor) filter with its practical limitation.	**07**
	(b)	Design 7th order Butterworth high pass filter for f_C= 3 Khz and H_0 = 0 dB.	**07**
Q.4	**(a)**	Discuss various techniques for input offset error compensation in an op-amp.	**07**
	(b)	Describe a fifth-order 1.0-dB Chebyshev high-pass filter with fc = 360 Hz and high frequency gain H0 adjustable from 0 to 20 dB. Use equal capacitances throughout.	**07**
Q.5	**(a)**	Describe the effect of finite GBP on integrator circuit.	**07**

	(b)	A 741C Opamp with ±15V supplies is configured as a noninverting amplifier with a gain of 10 V/V. (a) If the ac input amplitude is V_{im} = 0.5V, what is the maximum frequency before the output distorts? (b) If f = 10 KHz, what is the maximum value of V_{im} before the output distorts? (c) If V_{im} = 40 mV, what is the useful frequency range of operation? (d) If f = 2 KHz, what is the useful input amplitude range?	**07**
Q.5	**(a)**	Explain different sources of noise in detail.	**07**
	(b)	Discuss internal frequency compensation of an Opamp.	**07**

****