Seat No.: _____ Enrolment No._____

GUJARAT TECHNOLOGICAL UNIVERSITY

M. E. - SEMESTER – II • EXAMINATION – SUMMER • 2014

Subject code: 1720906 **Date: 23-06-2014**

Subject Name: Robotics

Time: 02:30 pm - 05:00 pm **Total Marks: 70**

Instructions:

1. **Attempt all questions.**
2. **Make suitable assumptions wherever necessary.**
3. **Figures to the right indicate full marks.**

Q.1 **(a)** Draw configuration diagram frame diagram for following A 2R manipulator, acting in a horizontal plane.(Can assume axis name) **07**

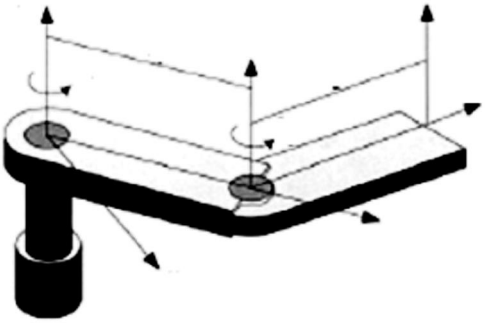

(b) What is compliance? Give detail idea about Remote Center Compliance device. **07**

Q.2 **(a)** Figure shows the linkage mechanism and dimensions of a gripper used to handle a work part for machining operation. The gripper force is determined to be 150N. Determine the actuating force F_a applied to the plunger.(Assume Suitable data) **07**

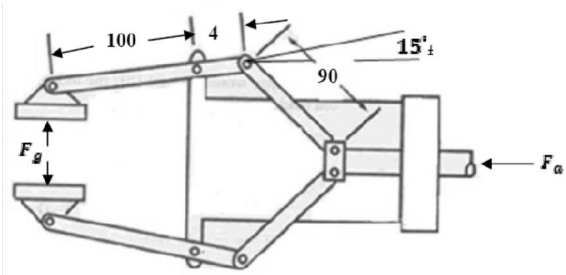

(b) Give Eulerôs angle representation for the rotation of arm and gripper. **07**

OR

(b) Give advantages and disadvantages of the different sensors used in robotic system. **07**

Q.3 **(a)** Describe Link parameters and joint parameters. **07**

(b) Explain Tactile Sensors. **07**

OR

Q.3 **(a)** Describe Application of Robot **07**

(b) How do incorporate image processing in Robot **07**

Q.4 **(a)** The end point of a link of manipulator is at [2 2 6 1]. The link is rotated by 90^0about *X*-axis, then by -180^0about its own *Z*-axis and finally by -90^0about its own *Y*-axis. Find the resulting homogeneous transformation matrix and final location of the end point. **07**

(b) Classify the robot end effectors and describe in brief. **07**

OR

Q.4	**(a)**	What is the difference between inverse kinematics and forward kinematics	**07**
	(b)	Explain Roll, Pitch and Yaw angle for wrist configuration with a sketch.	**07**
Q.5	**(a)**	What are the different Mode for Programming Robot	**07**
	(b)	What is Degree of freedom in terms of robot.	**07**

OR

Q.5	**(a)**	Define Trajectory planning.	**07**
	(b)	Explain Proximity Sensors in Details	**07**

****