Seat No.: _____ Enrolment No._____

GUJARAT TECHNOLOGICAL UNIVERSITY

M. E. - SEMESTER – II • EXAMINATION – SUMMER • 2014

Subject code: 1722001 **Date: 16-06-2014**

Subject Name: Finite Element Method

Time: 02:30 pm - 05:00 pm **Total Marks: 70**

Instructions:

1. **Attempt all questions.**
2. **Make suitable assumptions wherever necessary.**
3. **Figures to the right indicate full marks.**

Q.1	**(a)**	Give merits and demerits of Finite Element Method along with its stepwise procedure of solution.	**07**
	(b)	Explain briefly CST element with its strain/nodal displacement linking matrix. Derive the stiffness matrix for the CST element having three nodes at (0, 0), (3, 0) and (3, 3). The value of modulus of elasticity = 2.1 x 10^{11} N/m^2, Poisson's ratio = 0.25 and thickness of element = 12 mm.	**07**
Q.2	**(a)**	Explain plane stress and plane strain condition with stress/strain matrices.	**07**
	(b)	Describe how body forces and surface forces are calculated for CST element.	**07**
		OR	
	(b)	Derive shape function, stress-strain and strain-displacement relationship for LST element.	**07**
Q.3	**(a)**	Give the conditions to be satisfied for axisymmetric problem. Discuss type of stresses and strains induced in axisymmetric element.	**07**
	(b)	Evaluate strain-displacement matrix at the centroid of axisymmetric element. The *r*- and *z*-coordinates of the nodes of triangular element are (0, 0), (3, 0) and (3, 3). Take modulus of elasticity = 210GPa, Poisson's ratio = 0.3. The dimension of coordinates is in meter.	**07**
		OR	
Q.3	**(a)**	What is Pascal's triangle? Give its use in FEM. Also give the shape function of four nodded plate bending element.	**07**
	(b)	What is tetrahedral element? Give the various shape functions and D matrix for the element. Also discuss the steps involved in the calculating the stiffness matrix.	**07**
Q.4	**(a)**	Derive the expressions for natural coordinates in a constant strain triangle element and show that they are nothing but area coordinates.	**07**
	(b)	Derive shape functions for a three-noded bar element using polynomial form in local coordinates.	**07**
		OR	
Q.4	**(a)**	Obtain strain/nodal displacement matrix for four nodded quadrilateral element using natural coordinates.	**07**
	(b)	Assemble Jacobian matrix corresponding to the Gauss point (0.57735, 0.57735) for the element shown in Fig. 1.	**07**
Q.5	**(a)**	Determine displacement at B, C and reaction at A and D for a bar subjected to torque shown in Fig. 2. The polar moment of inertia of AB, BC and CD part is 3.5 x 10^7 mm^4, 2.2 x 10^7 mm^4 and 4 x 10^7 mm^4, respectively. Take shear modulus = 8.0 x 10^7 kN/m^2.	**07**
	(b)	For the beam and loading as shown in Fig. 3, determine slope at B and C. Take modulus of elasticity = 210 GPa and moment of inertia = 3.0 x 10^6 m^4.	**07**

OR

Q.5 **(a)** Describe the Hermite Polynomial. **07**

(b) Derive shape function for two noded bar element and four nodded rectangular element by Lagrangian polynomial. **07**

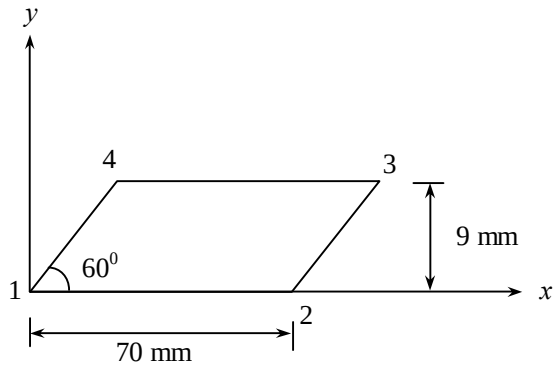

Figure 1

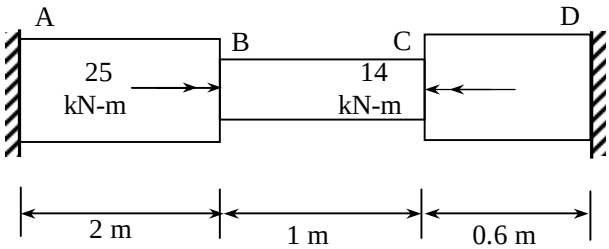

Figure 2

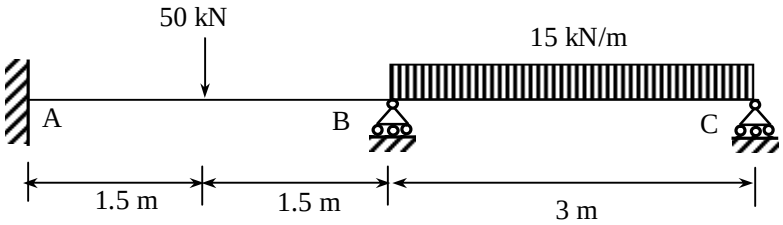

Figure 3

****