Seat No.: _____ *Enrolment No._____*

GUJARAT TECHNOLOGICAL UNIVERSITY

M. E. - SEMESTER – I • EXAMINATION – SUMMER • 2014

Subject code: 1724103 **Date: 20-06-2014**

Subject Name: Error Control Coding in Communication

Time: 02:30 pm - 05:00 pm **Total Marks: 70**

Instructions:

1. **Attempt all questions.**
2. **Make suitable assumptions wherever necessary.**
3. **Figures to the right indicate full mark.**

Q.1 **(a)** Prove that The minimum distance of a linear block code is equal to the minimum weight of its nonzero code words and vice versa. **07**

(b) Construct the standard array for the (7,3) code with generator matrix **07**

$$G = \begin{bmatrix} 1 & 0 & 1 & 1 & 1 & 0 & 0 \\ 1 & 1 & 1 & 0 & 0 & 1 & 0 \\ 0 & 1 & 1 & 1 & 0 & 0 & 1 \end{bmatrix}$$

and determine the correctable patterns and their corresponding syndromes.

Q.2 **(a)** Prove that no two n-tuples in the same row of a standard array are identical and every n-tuple appears in one and only one row. **07**

(b) For m=3, there exists a (7, 4) hamming code generated by $g(x)=1+x+x^3$. Suppose that it is shorted by two digits. Draw the encoding and decoding circuit for resultant shorted code (5, 2). Decode the received code [1 1 1 1 0] using the circuit. **07**

OR

(b) Explain the concept of extended hamming code. For the (7, 4) hamming code, Encode the following message words in terms of extended hamming code. **07**

(1) [1 1 0 0]
(2) [1 0 1 0]

& Decode the following hamming code:

(1) [1 1 1 0 0 0 0]
(2) [1 0 1 1 1 0 1]

Q.3 **(a)** Prove that the generator polynomial g(x) of an (n, k) cyclic code is a factor of x^n+1 . **07**

(b) Consider the convolution encoder shown in figure1.the code is systematic. **07**

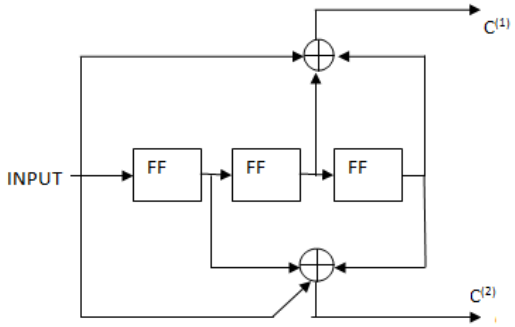

figure.1

(1) Illustrate the state transition diagram of this encoder.

(2) For the input data sequence of [0 1 0 1 1], determine the corresponding codeword.

OR

Q.3 **(a)** Explain encoding of convolution codes using time domain approach with an **07**

example.

(b) For the (3,2,1) encoder shown in figure 2, find code-word C for input sequences of $d^{(1)}$=011 and $d^{(2)}$ = 100 using **07**

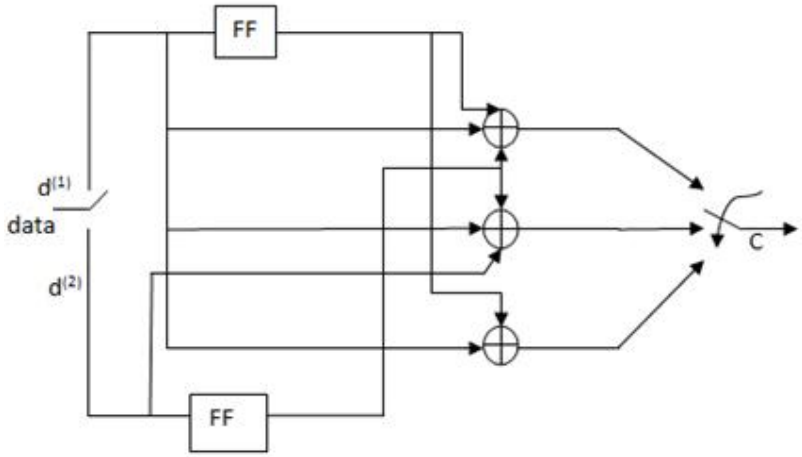

figure 2

(1) Time domain approach

(2) Transform domain approach

Q.4 **(a)** For (15, 7) BCH code, GF (2^4) = x^4+x+1. Design the code for message [0 1 1 0 0 1 0] which has two error correcting capability. **07**

(b) For (15, 5) BCH code, GF (2^4) = x^4+x+1. Decode the received polynomial is $x^{14}+x^3$. **07**

OR

Q.4 **(a)** For (7, 3) R-S code in Systematic form **07**

(1) Encode the symbols {2, 3, 5}. Show the resulting codeword in binary form.

(2) Verify the encoding results by evaluating the codeword polynomial at the roots of the (7, 3) R-S generated polynomial g(x).

(b) Write down procedure of R-S code decoding using suitable example. **07**

Q.5 **(a)** Fig.3 shows RSC encoder, using this construct Turbo code. The interleaver permutation is given by [6, 3, 8, 9, 5, 7, 1, 4, 10, 2]. The message bit sequence to encode is m= [0 1 0 1 0 1 1 0 0 1] with leftmost bit entering the encoder first. Find out encoded output sequence. **07**

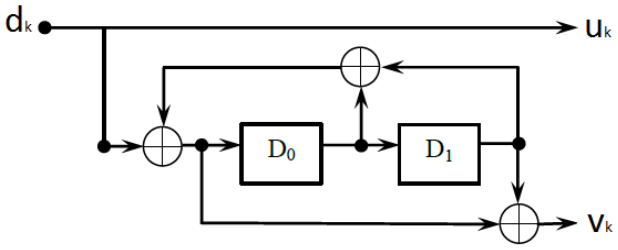

figure 3

(b) Write a short note on types of errors introduce by communication channel. **07**

OR

Q.5 **(a)** Write a short note on turbo code. **07**

(b) Explain MAP decoding algorithm **07**

****