Seat No.: _____ Enrolment No._____

GUJARAT TECHNOLOGICAL UNIVERSITY

ME - SEMESTER– II (Old course)• REMEDIAL EXAMINATION – SUMMER 2015

Subject Code: 1720302 **Date:13/05/2015**

Subject Name: Advance Instrumentation

Time: 02:30 pm to 5:00 pm **Total Marks: 70**

Instructions:

1. **Attempt all questions.**
2. **Make suitable assumptions wherever necessary.**
3. **Figures to the right indicate full marks.**
4. **Make suitable assumptions wherever necessary and mention it clearly in your solution.**
5. **Consider design parameters of 741 op-amp when not mentioned explicitly in question.**
6. **Necessary circuit diagrams are must while deriving for equations.**
7. **Show all node voltages and branch currents used in your derivations.**
8. **Figures to the right indicate full marks.**

Q.1 Derive the equations for ideal gain and actual gain of the circuit shown in following figure. Consider R_1 = 1 MÝ, R_2 = 1 MÝ, R_3 = 100 kÝ, R_4 = 1 kÝ, and R_L = 2kÝ, evaluate ideal and actual gain considering r_d = 1 MÝ, a = 10^5 V/V, and r_0 = 75 Ý. **14**

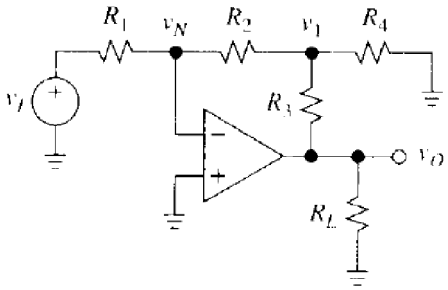

Q.2 **(a)** What do you mean by loading effect? With the help of circuit diagram and equations explain the loading effect in voltage amplifier. Explain your point considering suitable values of resistors and parameters. **07**

(b) Derive the equation of closed loop actual gain of non-inverting amplifier. **07**

OR

(b) Design a variable source having the range -10V Ò Vs Ò10V using a 741 op-amp and a 100 kÝ potentiometer. What is the need of op-amp in this design? If Vs is set to 5V how much does it change when we connect a 1 kÝ load to the source? **07**

Q.3 **(a)** What is the need of bridge linearization circuits? Discuss them with the help of circuit diagrams and necessary equations. **07**

(b) Derive the equations of A_{dm}, A_{cm}, and $CMRR_{dB}$ for difference amplifier shown in following figure. **07**

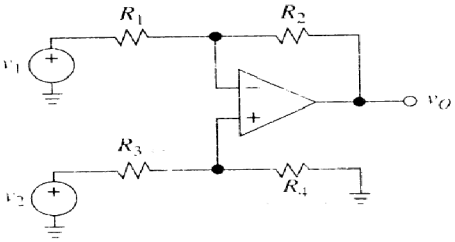

OR

Q.3 **(a)** Draw the circuit diagram of dual op-amp instrumentation amplifier with variable gain and derive the equation of gain. Consider virtual short condition. **07**

(b) Draw the circuit diagrams of Howland and Improved Howland current pump and prove the advantage of Improved Howland circuit over Howland circuit by suitable example. **07**

Q.4 **(a)** Draw the circuit diagram of second order low pass KRC filter and derive the equations for gain, γ_0 and Q-factor. **07**

Using the equal component design, specify elements for a second order low pass filter with f_0 = 2 kHz and Q = 5. What is the dc gain of this design?

(b) Define input bias and input offset currents. What are their typical valued for 741 op-amp? Derive the equation of error voltage generated due to input bias and input offset currents. Give your suggestion to reduce the error voltage. **07**

OR

Q.4 **(a)** List important features of switched capacitor filters. Discuss its practical limitations in detail. **07**

(b) The difference amplifier shown in following figure uses 741 op-amp and a perfectly matched resistance set with R_1 = 10 kq and R_2 = 1000 kq. Suppose the inputs are tied together and driven with a common signal v_I. Estimate the typical change in v_o if (i) v_I is slowly changed from 0 to 10V, and (ii) v_I is a 100 kHz, 10V peak to peak sine wave. Consider $CMRR_{dB}$ (100 kHz) = 37dB. **07**

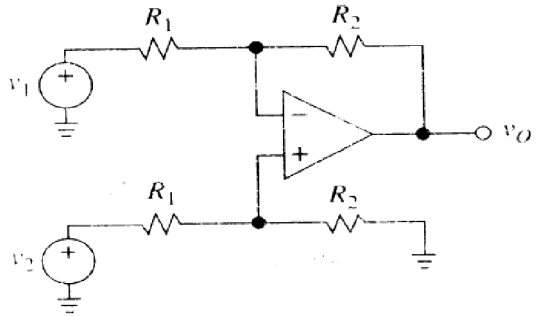

Q.5 **(a)** Explain slew rate with the help of necessary waveforms and derivations. An op-amp shown in following figure has an input bias current of 15 εA and a compensation capacitance Cc of 20 pF, and slew rate of 0.5V/εs, find its response $v_o(t)$ to a step input of -0.5 V. Consider R_1 = 2 kq and R_2 = 8 kq. **07**

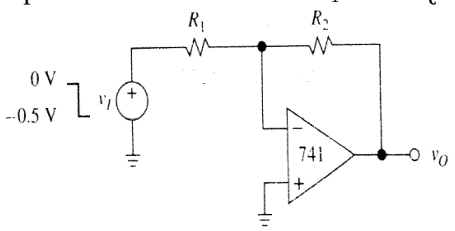

(b) With the help of circuit diagram and frequency response discuss the limitation of differentiator circuit and provide solution for the same. **07**

OR

Q.5 **(a)** Discuss following terms (i) Spectral noise density (ii) Noise power density (iii) White noise **06**

(b) Describe the effect of finite GBP on integrator circuits. **08**

****