Seat No.: _____ Enrolment No._____

GUJARAT TECHNOLOGICAL UNIVERSITY

ME - SEMESTER– II (Old course)• REMEDIAL EXAMINATION – SUMMER 2015

Subject Code: 1720901 **Date:12/05/2015**

Subject Name: Finite Element Method

Time: 02:30 pm to 5:00 pm **Total Marks: 70**

Instructions:

1. **Attempt all questions.**
2. **Make suitable assumptions wherever necessary.**
3. **Figures to the right indicate full marks.**

Q.1 **(a)** Explain the concept of FEM briefly and outline the procedure. **07**

(b) For the loading system as shown in figure 1, determine the displacements, stresses and support reactions. Take modulus of elasticity as 80,000 N/mm^2. **07**

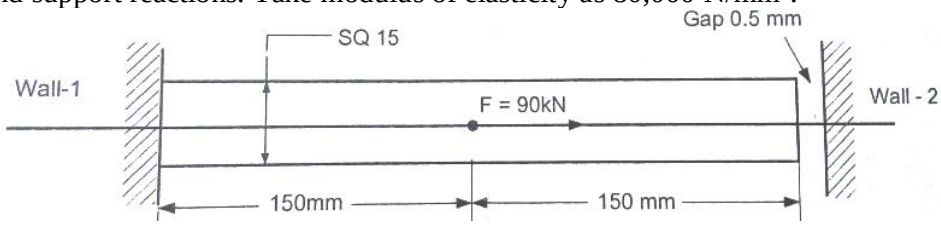

Figure 1

Q.2 **(a)** Derive the shape function for quadratic bar element and describe effect of node numbering on assembled stiffness matrix. **07**

(b) Explain the weighted residual method for finite element formulation. **07**

OR

(b) Using the Galerkin approach method derive the following relation. **07**

KQ=F

Where K = Global stiffness Matrix

Q = Global Displacement vector and

F = Global Load vector

Q.3 **(a)** What is CST element? Obtain the strain matrix for CST element. **07**

(b) The thin plate of uniform thickness 20 mm, is as shown in Figure 2. In addition to the self weight, the plate is subjected to a point load of 400N at mid-depth. The Young's modulus E = 2 × 10^5 N/mm^2 and unit weight γ = 0.8 × 10^{-4} N/mm^3. Analyse the plate after modeling it with two elements and find the stresses in each element. **07**

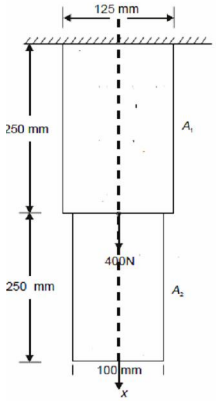

Figure 2

OR

Q.3 **(a)** Explain the application of FEM for solving a truss problem with a suitable example. **07**

(b) For the plane truss shown in figure 3. **07**

a. Determine the displacement components at nodes.

b. Determine the stresses in each bar.

Take E= 30 X 10^7 Pa and A =0.02 m^2

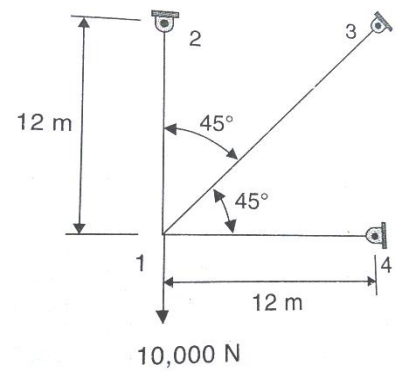

Figure 3

Q.4 **(a)** Isoparametric elements are frequently used in finite element formulation whereas subparametric formulations are seldom used. ï Justify the statement with proper reasoning. **07**

(b) Analyse the beam shown in Figure 4 by finite element method and determine the end reactions. Also determine the deflections at mid spans given E = 2 X10^5 N/mm^2 and I = 5 X 10^6 mm^4. **07**

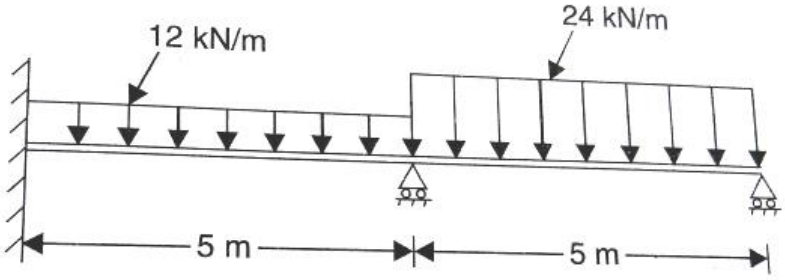

Figure 4

OR

Q.4 **(a)** Derive the shape functions in terms of natural coordinate system for a four noded quadrilateral element. **07**

(b) Construct the weak form for the non linear Euler ï Bernoulli partial differential equation of beam theory **07**

$$\frac{d^2}{dx^2}\left(EI\frac{d^2w}{dx^2}\right) + kw = f \text{ for } 0 < x < l$$

$$w = \left(EI\frac{d^2w}{dx^2}\right) = 0 \quad \text{at } x = 0, l$$

Not that *EI* and *f* are functions of *x* and *k* is the foundation modulus and is to be considered constant.

Q.5 **(a)** Explain the following elements used in FEA stating their applications. Draw their sketches showing position of nodes. **07**

(i) Plate bending elements (ii) Curved shell elements (iii) 3 D solid elements.

(b) Consider a 1 mm diameter, 50 mm long aluminum fin used to enhance heat transfer from a surface wall maintained at 300°C. The governing equation and boundary conditions are given by **07**

$$k\frac{d^2T}{dx^2} = \frac{Ph}{A}(\Delta T)$$

$$\left.\frac{dT}{dx}\right|_{x=l} = 0$$

$$T(x = 0) = T(wall) = 300^\circ C$$

Where k = 200 W/m/°C is the coefficient of thermal conductivity, P is the perimeter, A is the cross sectional area, h = 20 W/m2°C is the convective heat transfer coefficient, ΔT is the temperature difference between the surface of the fin and ambient temperature which in present case is 30°C. Determine the Temperature distribution in the fin using Galerkin weighted residual method.

OR

Q.5 **(a)** Determine the Cartesian coordinate of the point P (ɜ=0.4, ɖ=0.4) for the element shown in figure 5. On this point the load components in X and Y directions are 20kN and 8 kN respectively. Determine its nodal equivalent forces. **07**

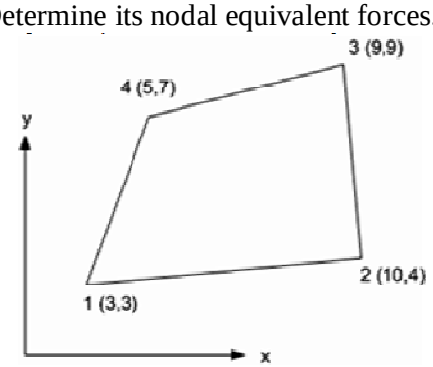

Figure 5

(b) Explain what do you understand by plane stress and plane strain problems? Write the stress-strain relations for each one. **07**

****