Seat No.: _____ Enrolment No._____

# GUJARAT TECHNOLOGICAL UNIVERSITY

**ME - SEMESTER– II (Old course)• REMEDIAL EXAMINATION – SUMMER 2015**

**Subject Code: 1724103** **Date:14/05/2015**

**Subject Name: Error Control Coding Communication**

**Time: 02:30 pm to 5:00 pm** **Total Marks: 70**

**Instructions:**

1. **Attempt all questions.**
2. **Make suitable assumptions wherever necessary.**
3. **Figures to the right indicate full marks.**

**Q.1** **(a)** Explain the formation of BCH codes. **07**

**(b)** What are RS codes? How they are formed. List out applications of the same. **07**

**Q.2** **(a)** Consider a (6,3) linear code whose generator matrix is **07**

$$G = \begin{bmatrix} 1 & 0 & 0 & 1 & 0 & 1 \\ 0 & 1 & 0 & 1 & 1 & 0 \\ 0 & 0 & 1 & 0 & 1 & 1 \end{bmatrix}$$

(1) Find all code vectors.
(2) Find all the hamming weights and distances.
(3) Find minimum weight parity check matrix.
(4) Draw the encoder circuit for the above codes.

**(b)** Prove that ñThe error correcting capability of a linear block code with minimum distance $d_{min}$ is $\frac{d_{min}-1}{2}$ ò. **07**

**OR**

**(b)** Define Hamming Bound. What is significance of Hamming Bound? Explain with proper example. **07**

**Q.3** **(a)** Discuss various types of errors in error control systems and also explain various methods of controlling errors. **07**

**(b)** Explain the encoding process for binary cyclic codes using (n-k) bit shift register. Also design an encoder for the (7,4) binary cyclic code generated by $g(x)=1+x+x^3$ and verify its operation using the message vector (1 0 1 1). **07**

**OR**

**Q.3** **(a)** Write down various properties of cyclic codes. **07**

**(b)** Design a feedback shift register encoder for (8,5) cyclic code with generator matrix $g(x)=1+x+x^2+x^3$. Using meggitt decoder circuit correct the single error in the received code vector 10011110 **07**

**Q.4** **(a)** For a (2,1,4) convolutional encoder **07**

(1) Find the impulse response and hence calculate the output produced by the information sequence 10111.
(2) Write the generator polynomials of the encoder and recomputed the output for the input of (1) and compare it with part (1).

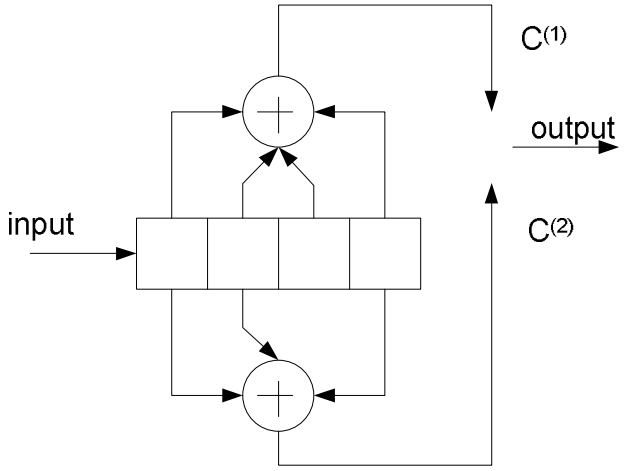


**(b)** Explain Viterbi decoding algorithm with proper example. **07**

**OR**

**Q.4** **(a)** For a (2,1,3) convolutional encoder as shown below **07**

(1) Draw state diagram

(2) Find out encoder output produced by the message sequence 11101 by traversing through the code tree.

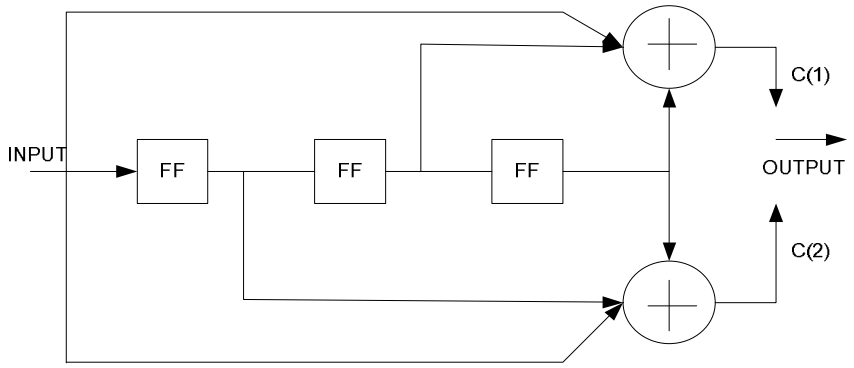


**(b)** Explain trellis diagram of a convolutional encoder with proper example. **07**

**Q.5** **(a)** Explain recursive systematic convolution codes. **07**

**(b)** Write down short note on EG-LDPC. **07**

**OR**

**Q.5** **(a)** Explain following:

(1) Compare LDPC code with Turbo Code. List out advantages and disadvantages. **04**

(2) List out the criteria for good LDPC codes. **03**

**(b)** What is objective of an interleaver? Explain block interleaving process with example. What is its major disadvantage? **07**

**********