Seat No.: _____ Enrolment No._____

GUJARAT TECHNOLOGICAL UNIVERSITY

ME - SEMESTER– I (New course)• REMEDIAL EXAMINATION – SUMMER 2015

Subject Code: 2710907 **Date:15/05/2015**

Subject Name: Advanced Engineering Dynamics

Time: 10:30 am to 1:00 pm **Total Marks: 70**

Instructions:

1. **Attempt all questions.**
2. **Make suitable assumptions wherever necessary.**
3. **Figures to the right indicate full marks.**

Q.1	**(a)**	Explain the Rectangular Cartesian Coordinates	**07**
	(b)	A right circular cone is defined by $x^2 + y^2 = 9z^2$, (x, y, and z have unit of millimeters). The vertical position of a block sliding along the interior of such a cone is observed to be Z = 480 ï 80t^2, and X = y^2/200. Also, y>0 throughout the motion. Determine the velocity and acceleration of the block when t = 2s.	**07**
Q.2	**(a)**	Explain the Angular momentum of Rigid bodies.	**07**
	(b)	Discuss; Eulerian Angles.	**07**
		OR	
	(b)	Arm AB is turned by a motor at a constant rate of 1800 rev/min. Cap B connects this bar BC with a fork and clevis joint, and the cap is free to rotate about the AB axis. The connection between bar BC and collar C is a ball-and-socket joint. Determine the velocity and acceleration of collar C and the angular velocity and angular acceleration of bar BC when the system is in the position shown in (figure:- 1).	**07**
Q.3	**(a)**	Derive the momentum and energy principles for rigid bodies.	**07**
	(b)	Derive the inertia matrix of the quarter-sphere about the xyz axes; then use that result to obtain the inertia matrix for a quarter-spherical shell whose skin thickness is << a. express each result in terms of the mass m of that body. (figure:-2)	**07**
		OR	
Q.3	**(a)**	Derive Newton-Euler equation of motion for rigid bodies.	**07**
	(b)	Discuss the general procedural steps for Newton-Euler Equations of motion.	**07**
Q.4	**(a)**	Derivation of Langrageôs Equation.	**07**
	(b)	Prove that the virtual work done by the inertia forces is equal to the time rate of change of work done by the momentum minus the virtual change in kinetic energy.	**07**
		OR	
Q.4	**(a)**	Definition of Generalized forces.	**07**
	(b)	Force F_1 causes the collar to translate such that its horizontal position x is known as a function of t. force F_2 is known as a function of t. Generalized coordinates are the absolute angle of rotation d_1 for the upper bar and the relative angle d_2 for the lower bar. Determine the corresponding generalized forces. The weight of each bar is negligible in comparison with the magnitude of F_2. (Figure : 3)	**07**

Q.5	**(a)**	Discuss the Lagrange equation with Constraints.	**07**
	(b)	Discuss the nonholonomic Hamilton principle with suitable example.	**07**

OR

Q.5	**(a)**	Derive Hamiltonôs equations	**07**
	(b)	Derive formulation with Quasi-Coordinates.	**07**

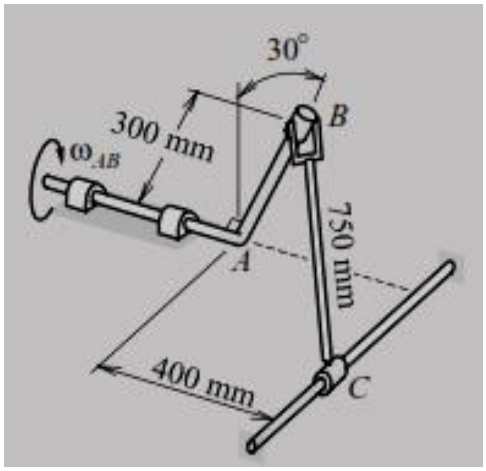

Figure : 1

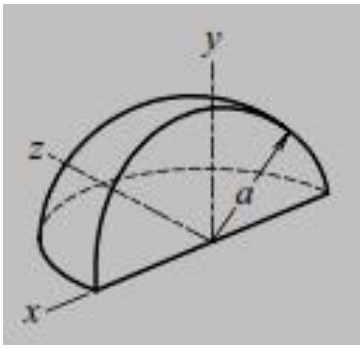

Figure :2

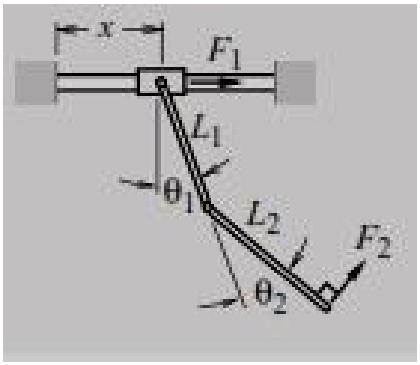

Figure :3

****