Seat No.: _____ Enrolment No._____

GUJARAT TECHNOLOGICAL UNIVERSITY

ME- SEMESTER II– EXAMINATION – SUMMER 2015

Subject Code: 2720312 **Date: 26/05/2015**

Subject Name: INTELLIGENT SENSORS AND INSTRUMENTATION

Time: 2:30 PM – 5:00 PM **Total Marks: 70**

Instructions:

1. **Attempt all questions.**
2. **Make suitable assumptions wherever necessary.**
3. **Figures to the right indicate full marks.**

Q.1	**(a)**	Explain triple op-amp instrumentation amplifier and derive formula for gain.	**07**
	(b)	Which are different thermal sensors? Give different applications of thermal sensors.	**07**
Q.2	**(a)**	Explain the error caused by Input bias and offset currents in detail	**07**
	(b)	Explain Power supply and filtering needs for Op-Amp.	**07**
		OR	
	(b)	Find v_O/v_I for the circuit shown in figure 1.	**07**
Q.3		Draw the circuit diagram of second order high-pass KRC filter and derive equations for dc gain, ɤ 0, and Q. Design a filter with f0 = 500 Hz and Q = 2 using unity gain circuit.	**14**
		OR	
Q.3		Explain and design a multiple feedback band-pass filter with f_0 = 1KHz, Q=10, and H0 = 20DB. Also draw the circuit.	**14**
Q.4	**(a)**	Explain switched capacitor in detail	**07**
	(b)	Briefly explain Wireless Sensor Based on Microcontroller and Communicating Devices	**07**
		OR	
Q.4	**(a)**	How performance of integrator can be improved?	**07**
	(b)	Briefly explain types of standards used for smart sensors.	**07**
Q.5	**(a)**	Find n for a low-pass Butterworth response with fc =1kHz, fs=2kHz, A_{max}=1dB, and A_{min}=40dB.	**07**
	(b)	The difference amplifier of figure 2 uses a 741 op amp having CMRR of 90dB and perfectly matched resistances R1=10Kq and R2=100Kq. If the inputs are tied together and driven with a common signal vI (i.e v1 = v2 = vI) then estimate the typical change in vo if (i) vi is slowly changed from 0 to 10V and (ii) vi is a 10KHz, 10 V peak to peak sine wave. Consider CMRR at 10 KHz of 57 dB.	**07**
		OR	
Q.5	**(a)**	Find v_N , v_P and v_O in the circuit shown in fig. 3. Repeat with 40 KÝ resistance in parallel with .4mA source.	**07**
	(b)	Explain Transducer bridge and derive formula for v_O.	**07**

.....

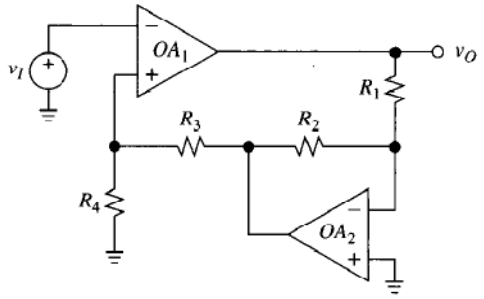

Fig. 1

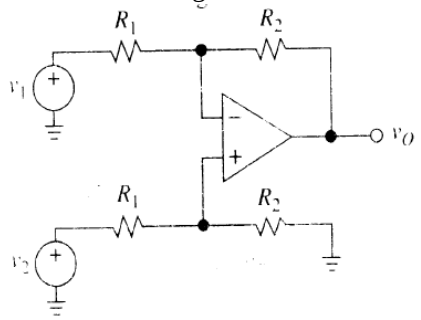

Fig. 2

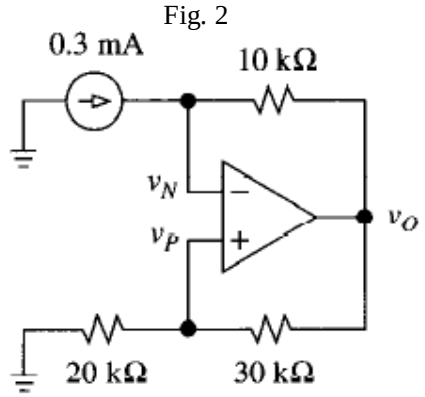

Fig. 3

****