Seat No.: _____ Enrolment No._____

GUJARAT TECHNOLOGICAL UNIVERSITY

ME- SEMESTER II– EXAMINATION – SUMMER 2015

Subject Code: 2720802 **Date: 26/05/2015**

Subject Name: Computer Aided Manufacturing

Time: 2:30 PM – 5:00 PM **Total Marks: 70**

Instructions:

1. **Attempt all questions.**
2. **Make suitable assumptions wherever necessary.**
3. **Figures to the right indicate full marks.**

Q-1 **(a)** How are the axes designated in CNC machine tools? Designate axes for three axes planar with neat sketch. State the rules followed by you in sequence. **07**

(b) What is canned cycle? Write syntax with its meaning for any three canned cycle used for CNC Lathe with FANUC controller. **07**

Q.2 **(a)** Explain 5 bit absolute rotary encoder with neat sketch. What is a difference between absolute and incremental rotary encoders? **07**

(b) A CNC machine tool table is powered by a servomotor, a ball screw and an optical encoder. The servomotor is connected to the ball-screw through a 5:1 ratio reduction gear box. The ball-screw has 2 threads per cm. The optical encoder is attached to the ball-screw and emits 500 counts per revolution (CPR) of the ball-screw, The motor rotates at maximum speed of 1000rpm. **07**

Determine:

1) The linear control resolution of the system in one axis.
2) The linear travel speed of table at maximum motor speed.
3) The frequency of pulse train emitted by encoder at maximum speed.

OR

(b) Enlist various compensations used in CNC machines. Explain cutter radius compensation for external and internal geometry with neat sketch. **07**

Q.3 **(a)** Prepare the process plan and write the complete manual part program for a forged steel component using G73 cycle as shown in fig. 1. **07**

(b) Compare CNC machines with conventional machines in regard to hardware used in them. **07**

OR

Q.3 **(a)** Write a part program to machine component shown in fig.-2 on CNC turning center. The process plan is as under: **07**

Op. No.	Operation	Speed (m/min)	Feed (mm/rev)	Depth (mm)	Tool
1	Facing	40	0.25	3	T06
2	Rough Turning	40	0.25	3	T03
3	Finish Turning	40	0.15	1	T04
4	Grooving	40	0.15	1.5	T05
5	Threading	8	--	--	T02

(b) What is a subprogram? Explain mirroring concept with part programming of a component of your choice (Use FANUC controller codes). **07**

Q.4 **(a)** Write a macro for machining center to drill number of holes on pitch circle diameter, starting angle, the depth of hole as shown in fig 3. [G65 P__X __ Y__ Z __ R __ D __ A __ K __ F __] Y=#25,X=#24,R=#18, F=#9,D=#7,K=#6, A#1. **07**

(b) Explain the role of geometry in design and manufacturing. **07**

OR

Q.4	**(a)**	What is macro? State any three applications. Explain variables along with its types and their usage in macro.	**07**
	(b)	What is feature? Explain any four types of attributes of features.	**07**
Q.5	**(a)**	What is DNC? List components of DNC. State advantages of DNC.	**07**
	(b)	What do you mean by ATC? State necessary requirements for ATC. Explain any two ATC with neat sketch.	**07**

OR

Q.5	**(a)**	With the help pf neat sketches, explain various network topologies. State merits and limitations of each of the topologies.	**07**
	(b)	Write steps to be followed for automatic NC program generation from CAD models. State the relative advantages and disadvantages between manual and computer aided part programming.	**07**

****

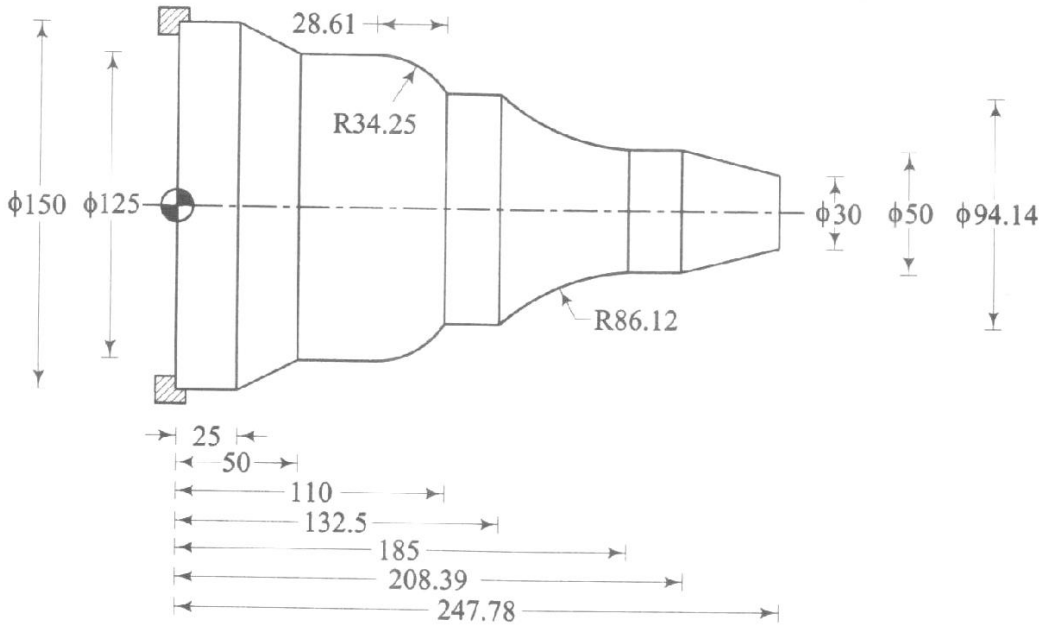

Fig.1

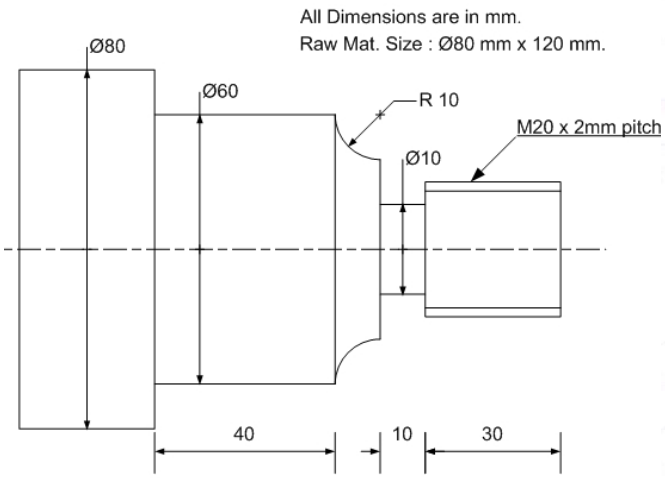

Fig. 2

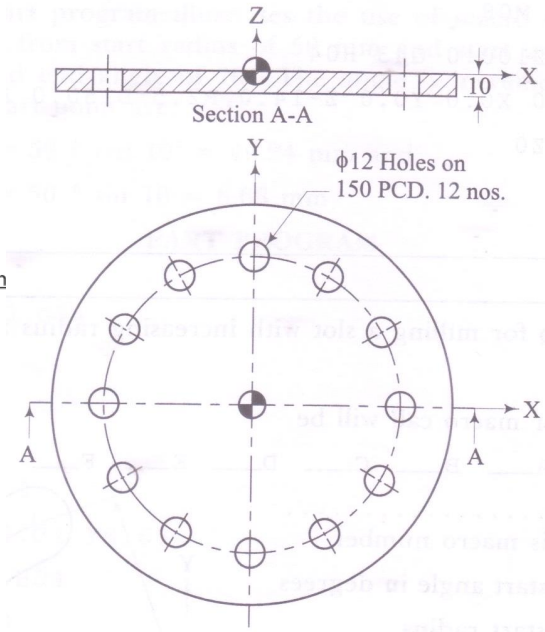

Fig. 3