Seat No.: _____ Enrolment No._____

GUJARAT TECHNOLOGICAL UNIVERSITY

ME- SEMESTER II– EXAMINATION – SUMMER 2015

Subject Code: 2720820 **Date: 01/06/2015**

Subject Name: MultiBody Dynamics

Time: 2:30 PM – 5:00 PM **Total Marks: 70**

Instructions:

1. **Attempt all questions.**
2. **Make suitable assumptions wherever necessary.**
3. **Figures to the right indicate full marks.**

Q.1	**(a)**	Derive Rodriguez formula in terms of unit vector along axis of rotation and angle of rotation.	**07**
	(b)	Vectors b_1 and b_2 are defined on the body. These two rigid lines are defined in the body coordinate system by the vectors $b_1 = [1\ 0\ 1]^T$ and $b_2=[0\ 1\ 0]^T$. The body is to be subjected to 180° rotation about b_1 and a 90° rotation about b_2. After these successive rotations, determine the global components of the vector b_3 whose components in the body coordinate system are $b_3 = [2\ 0\ 0]^T$.	**07**
Q.2	**(a)**	Two links are connected with a cylindrical joint. A unit vector along the joint axis is given as $\frac{1}{\sqrt{3}}[1\ 1\ 1]^T$. One link is fixed to the ground where as another link can move. Assuming that moving link translates with constant speed 4 m/sec and has the angular velocity about the joint axis 10 rad/sec, determine the velocity of point P on the moving link after moving link has rotated 60°. The coordinates of P in the moving link coordinate system are given by the vector $[1\ 1\ 0]^T$. Assume that the axes of the base link and the moving link coordinate system are initially the same.	**07**
	(b)	Derive the Jacobian matrix of constraint equation for a kinematically driven four bar mechanism.	**07**
		OR	
	(b)	Derive relation transformation matrix using Euler angles.	**07**
Q.3	**(a)**	Consider a system as shown in Fig. 1, consists of the ground denoted as body 1, a rod OA denoted as body 2, and a disk denoted as body 3. The rod is connected to the ground by a pin joint at O, while the disk is connected to the rod by a pin joint at A. The rod is assumed to be uniform and its length is L. Derive Newton-Euler equations, mass matrix, vector of applied forces and vector of constraint forces.	**07**
	(b)	Formulate the constraint equations of the cylindrical joint that connects two rigid bodies in a multibody system. Obtain also the constraint Jacobian matrix of this joint using the absolute Cartesian coordinates.	**07**
		OR	
Q.3	**(a)**	A mass-spring-damper system is shown in Fig. 2. Formulate the equation of motion for the same.	**07**
	(b)	For the slider-crank linkage shown in Fig. 3, obtain an expression for the virtual changes in the angular orientation of the coupler and displacement of the slider in terms of the virtual change of the angular orientation of the crank.	**07**

Q.4 **(a)** A two-body system shown in Fig. 4, consists of the ground and a rigid rod with a uniform cross-sectional area and length l^2. The reference point of the rod is assumed to be at its geometric centre. Obtain constraint Jacobian matrix and generalized coordinate partitioning matrices. **07**

(b) Determine the generalized force associated with the rotation of the crank shaft, due to the system of forces acting on the four-bar linkage shown in Fig. 5. **07**

OR

Q.4 **(a)** Using the concept of virtual work, derive the equation of generalized forces associated with the coordinates of two rigid bodies connected by springï damper ï actuator link. **07**

(b) The two-arm robotic manipulator shown in Fig. 6 is subjected to a torque M^2 that acts on link 2 and a force F^3 that acts at the tip point of link 3. The force F^3 is assumed to have a known direction defined by the angle ű. The mass of link 2 is assumed to be m^2, while the mass of link 3 is m^3. Considering the effect of gravity, determine M^2 and F^3 such that the system remains in static equilibrium. **07**

Q.5 **(a)** Consider a uniform slender rod that has mass density $ɟ^i$, cross-sectional area a^i, and length l^i. Assume that the reference point is selected to be one of the endpoints at which $x^i=0$, where x^i is the coordinate along the rod axis. Determine mass matrix of the rod using kinetic energy equation when the rod undergoes arbitrary large displacement. **07**

(b) Find the generalized reaction forces associated with the Cartesian coordinates of two bodies connected by a revolute joint in terms of Lagrange multipliers. **07**

OR

Q.5 **(a)** Derive the equation of element stiffness matrix of a beam element neglecting shear deformation. **07**

(b) Derive the equation of virtual work of elastic forces of an element of a deformable body. **07**

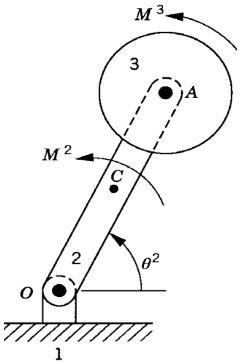

Fig. 1

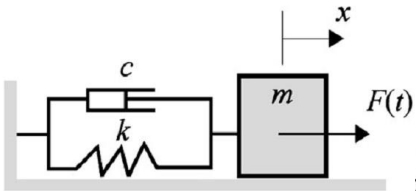

Fig. 2

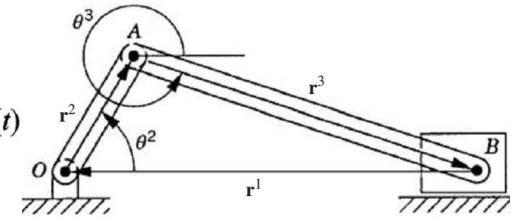

Fig. 3

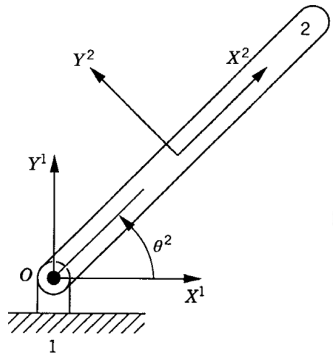

Fig. 4

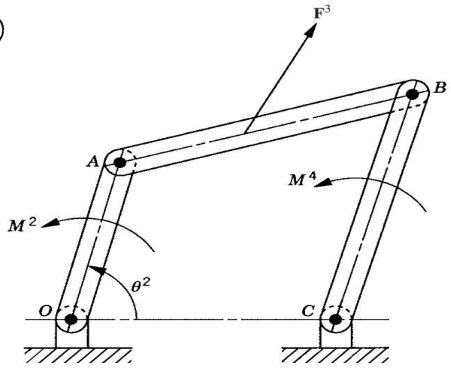

Fig. 5

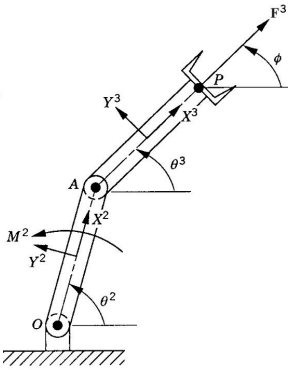

Fig. 6