Seat No.: _____ Enrolment No._____

GUJARAT TECHNOLOGICAL UNIVERSITY

ME- SEMESTER II– EXAMINATION – SUMMER 2015

Subject Code: 2722601 **Date:28/05/ 2015**

Subject Name: Advanced Digital Signal Processing and Applications

Time: 2:30 PM – 5:00 PM **Total Marks: 70**

Instructions:

1. **Attempt all questions.**
2. **Make suitable assumptions wherever necessary.**
3. **Figures to the right indicate full marks.**

Q.1 **(a)** Compare Forward and Backward Predictors based on their Mathematical-Logical Implementations, H/W structures, Applications and Algorithmic approach. **07**

(b) Below fig.(1) is the block diagram for modeling an unknown plant using an adaptive linear combiner. Apply Mean Square Error criterion and derive Yule walker equations. Also propose solution that leads to minimum MSE. **07**

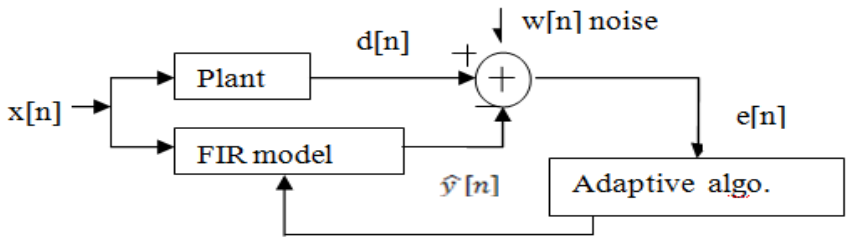

Fig.(1)

Q.2 **(a)** Discuss MA model for Power Spectrum Estimation with block diagram and necessary mathematical analysis. **07**

(b) For the block diagram in fig.(2), Construct and characterize AR(2) process having $a_1 = -0.9$, convergence space $\mu = 2$ and $\sigma_u^2 = 1.0$ **07**

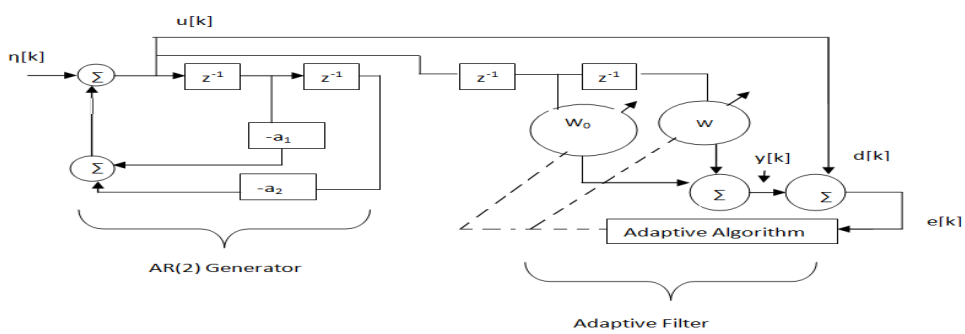

fig.(2)

OR

Q.2 **(b)** Consider Mean Square Error ξ as the Performance Criterion of an adaptive filter with Univariable performance surface given by $0.4x^2 + 4x + 11$. For over damped weight adjustment curve find out the range of μ as convergence parameter. If the initial value of weight vector x is zero and μ = 1.0, obtain expression of the performance surface and plot the learning curve. **07**

Q.3 **(a)** Discuss the RLS algorithm. **07**

(b) A single weight performance surface has the parameters $\xi = 0.1$, $\xi_{min}=0$ and optimum weight vector w* =2. Write an expression for performance surface. If the initial guess at the optimum weight is w=0 and the convergence parameter is μ = 4, what are the first three choices of w using simple gradient search algorithm. **07**

OR

Q.3 **(a)** Fig.(3) shows the Probability density of error $\mathring{u}_k$. For N samples of $\mathring{u}_k^2$, prove that the variance of MSE(ξ) estimate ($\hat{\xi}$) is $4\xi^2/5N$ for zero mean and $\frac{4+20\alpha_1^2/\sigma^2}{5(1+\alpha_1^2/\sigma^2)^2}\frac{\xi^2}{N}$ for given pdf. **07**

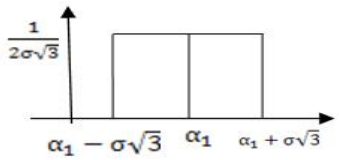

Fig.(3)

(b) Write short note on Performance Penalty with necessary figure and mathematical derivation. Also state its practical significance. **07**

Q.4 **(a)** A signal generator is connected with a measuring instrument using a cable as channel. The excitation i/p to the generator is $v_1[n]$ with autocorrelation element $r_{v1}(0) = 0.27$, the signal available at the o/p port of the generator is d[n]. While the signal is passing through the channel, a additive white noise signal v_2 with $r_{v2}(0) = 0.1$ and $r_{v2}(1) = 0$, gets added to the desired signal. The signal available at the i/p of the measuring instrument is u[n]. Design an optimal wiener filter with two weight vectors to recover the original useful signal from the received u[n]. The transfer functions of signal generating model is $H_1(z) = \frac{1}{1+0.8458z^{-1}}$ and that of the channel model is $H_2(z) = \frac{1}{1-0.9458z^{-1}}$. Draw the block diagram and also write the difference equations for each stage. **07**

(b) Write short note on LMS algorithm with its basic signal flow graph. **07**

OR

Q.4 **(a)** Discuss the application of adaptive filtering in Echo cancellation. **07**

(b) The received signal of a digital communication system is given by u[n]=s[n]+v[n], where s[n] is a distorted version of the transmitted signal and v[n] denotes additive white Gaussian noise. The correlation matrices of s[n] and v[n] are denoted by R_s and R_v, respectively. Assume that the elements of the matrix R_v are defined by $r_v(l) = \mathring{u}^2$ for l=0 and $r_v(l) = 0$ for $l \neq 0$. Determine the condition that the noise variance $\mathring{u}^2$ must satisfy for the correlation matrix of u[n] to be nonsingular. Consider the case of 2X2 correlation matrix. **07**

Q.5 **(a)** State the Wiener Hopf equations. Propose its solutions and also obtain its matrix formulation for optimum tap weight in terms of correlation matrix of the tap i/p vector and the cross correlation vector between the tap i/p vector and the desired response. **07**

(b) In following fig.(4), the original speech signal is affected by three delayed additive noise components from the noise source. The amount of each component is different. Decide weights for fixed filter and design adaptive filter for cancelling the noise components to obtain clean speech. Use LMS algorithm to update the weight also suggest the range of convergence parameter for which the updated weights give reduction in error. Draw necessary block diagrams for both the filter structures. Here the reference microphone receives some fraction of the delayed noise signal. Make suitable assumptions if required. **07**

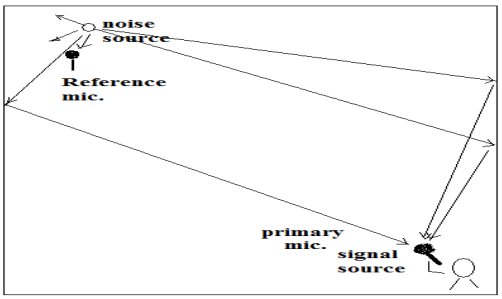

Fig.(4)

OR

Q.5 (a) Define Mean, Standard Deviation and Variance of a random variable. In an experiment the height of dogs is measured and the measurements are 600mm, 470mm, 170mm, 430mm and 300 mm. Find out the mean, standard deviation and variance of the dataset. Also explain the significance of each using this example i.e. (i) even if we are having mean, why standard deviation is defined. (ii) even if we are having standard deviation, why variance is defined. **07**

Q.5 (b) Define Eigen value and Eigen vector. What is its importance in adaptive signal processing? **07**

****