Seat No.: _____ Enrolment No._____

GUJARAT TECHNOLOGICAL UNIVERSITY

ME - SEMESTER– I (OLD course)• EXAMINATION – SUMMER 2015

Subject Code: 710703 **Date: 13/05/2015**

Subject Name: **Modern Control System.**

Time: 10:30 am to 1:00 pm **Total Marks: 70**

Instructions:

1. **Attempt all questions.**
2. **Make suitable assumptions wherever necessary.**
3. **Figures to the right indicate full marks.**

Q1. Explain the concept of a state. Define state variables. For the electrical network shown in fig. 1, select Vc_1 and Vc_2 as the state variables and write the state equations of the system. 14

Q2. A. When is a system said to be completely controllable. Determine the necessary and sufficient condition for a system to be completely state controllable using Kalmanôs Controllability test. 07

Q2. B. The state equations and output equation of a system are given by 07

$\dot{x}1$= -3x1+x2

$\dot{x}2$= x1-2x2+x3+2u

$\dot{x}3$= x1+x2+2u

y= $x_1+2x_2-x_3$

Check whether the system is completely controllable and completely observable.

OR

Q2. B. Using cascade decomposition, find the steady state model of 07

$G(s)=(s^2+6s+8)/(s+3)(s^2+2s+5)$

Q3. A. Define the transfer matrix of a control system. Determine the transfer matrix for a system given by 07

$$\begin{bmatrix} dx1/dt \\ dx2/dt \end{bmatrix} = \begin{bmatrix} 0 & 3 \\ -2 & -5 \end{bmatrix} \begin{bmatrix} x1 \\ x2 \end{bmatrix} + \begin{bmatrix} 1 & 1 \\ 1 & 1 \end{bmatrix} u(t) \text{ and } y=\begin{bmatrix} 2 & 1 \\ 1 & 0 \end{bmatrix} \begin{bmatrix} x1 \\ x2 \end{bmatrix}$$

Q3. B. Draw the block diagram and determine the state model of a system whose transfer function is given by 07

$G(s) = (19s^2 + 2s + 5)/(s^3 + 13s^2 + 25s + 22)$

OR

Q3. A. Define state transition matrix of a system. Find the same if matrix A is given by 07

$$A = \begin{bmatrix} 0 & 1 \\ -3 & -4 \end{bmatrix}$$

Q3. B.	For the mechanical system shown in the fig. 2, select appropriate state variables and represent in the state model form.	07
Q4. A.	Define positive definiteness, negative definiteness, positive semidefiniteness, negative semidefiniteness and indefiniteness with examples.	07
Q4. B.	Show that the following quadratic form is positive definite using Sylvesterôs criterion. $V(x)=2x_1^2 + 3x_2^2 +2x_3^2 +x_1 x_2 - x_1 x_3 +4 x_2 x_3.$ If the quadratic form is given by, $V(x)=4x_1^2 +5x_2^2 +x_3^2 - 8x_1 x_2 +4 x_1 x_3 - 4 x_2 x_3.,$ determine the definiteness of the scalar function.	07
	OR	
Q4. A.	Define stability, asymptotic stability and asymptotic stability in the large. Show graphical representations to support your answer.	07
Q4. B.	Determine the stability of a non-linear system governed by the equations $\dot{x}1= -x_1 +2x_1^2x_2$ and $\dot{x}2= -x_2$	07
Q5. A.	Explain Liapunovôs second method and his stability theorem.	07
Q5. B.	Explain the principle of duality and relate it with the controllability and observability of a system.	07
	OR	
Q5. A.	Examine the stability of a system described by the following equations by Krasovaskiiôs theorem. $\dot{x}1= -x_1$ and $\dot{x}2= x_1-x_2-x_2^3$	07
Q5. B.	Prove that the necessary and sufficient condition for arbitrary pole placement is that the system is completely state controllable.	07

**********XXXXXXXXXXXXXXXX**********

M.E. Sem I - Modern Control Systems.

Fig - 1.

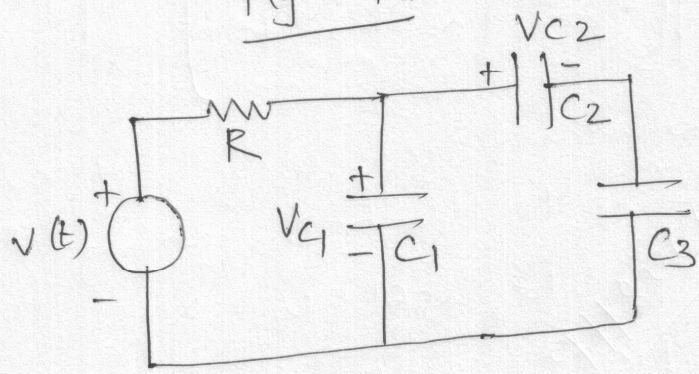
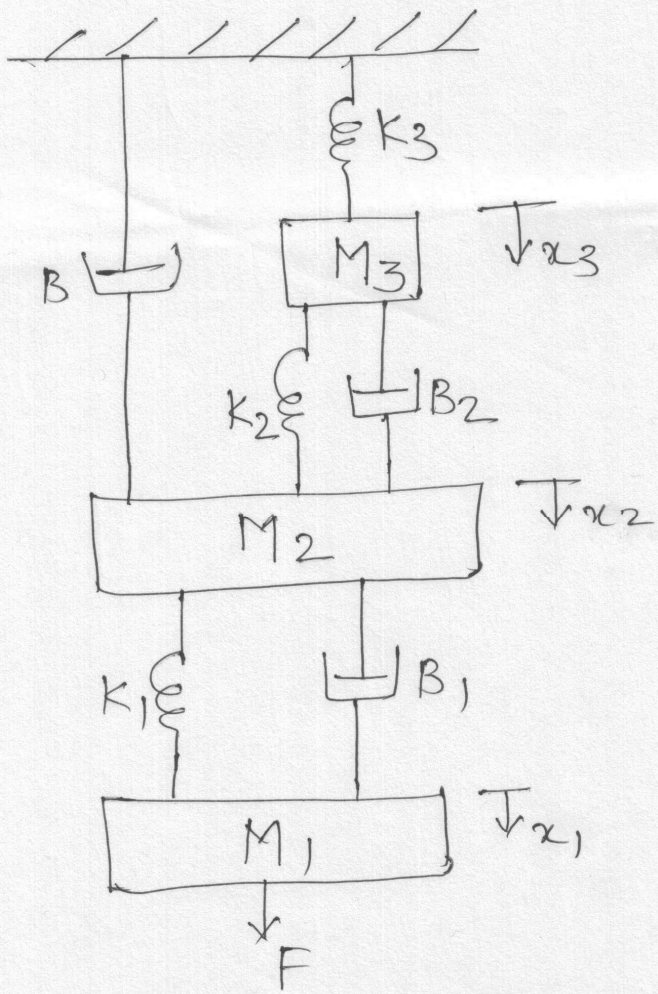
Fig - 2.