Seat No.: _____ Enrolment No._____

GUJARAT TECHNOLOGICAL UNIVERSITY

M.E –IIst SEMESTER–EXAMINATION – JULY- 2012

Subject code: 1720801 **Date: 06/07/2012**

Subject Name: Finite Element Method

Time: 10:30 am – 13:00 pm **Total Marks: 70**

Instructions:

1. **Attempt all questions.**
2. **Make suitable assumptions wherever necessary.**
3. **Figures to the right indicate full marks.**

Q.1 **(a)** Describe the typical applications of finite element Analysis with proper justification. **04**

(b) A Square tapered bar is as shown in figure. Model the bar by considering it as made of 2 elements of equal length. Determine the deflection at each node using elimination approach. Assume the modulus of elasticity as 200 GPa. **10**

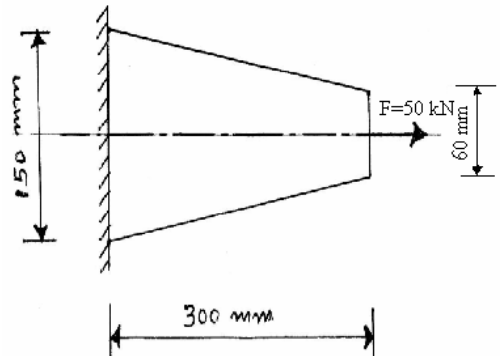

Q.2 **(a)** Explain the mesh generation technique for finite element analysis. **07**

(b) Differentiate the following **07**

i. Transient and Eigen value problems

ii. Essential Boundary condition (EBC) and Natural Boundary condition (NBC)

OR

(b) Derive shape functions for quadratic distribution. **07**

Q.3 **(a)** Derive the equation for plane truss in global co-ordinate system. **07**

(b) Determine the element stiffness matrix for each element of four bar truss as shown in figure. Also find out the nodal displacement. All members have same cross-sectional area A = 25 mm^2 and modulus E=200 GPa. Take L_1 = 300 mm , L_2 = 400 mm, P_1= 110 KN and P_2= 90 KN **07**

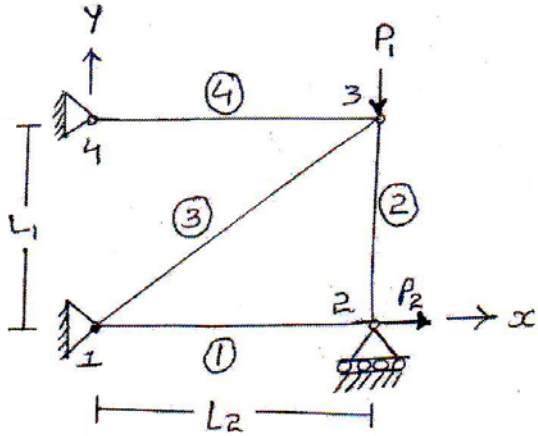

OR

Q.3 **(a)** Explain the types of Elements used in finite element method with neat sketch. **07**

(b) For the pin jointed configuration shown in figure. Determine the stiffness values K_{11}, K_{12} and K_{22} of the global stiffness matrix. Also calculate the stresses in elements and reaction at support. Take P= 1000 N. **07**

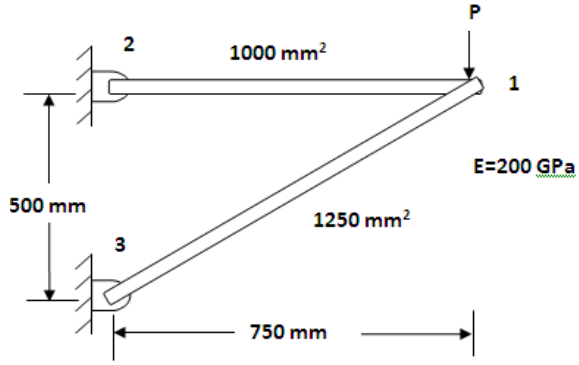

Q.4 **(a)** Discuss the type of errors in finite element method. **07**

(b) State the potential energy principle and derive equation [F] = [k] x [δ] from it. **07**

OR

Q.4 **(a)** Explain the basic steps of Finite Element Analysis. **07**

Q.4 **(b)** What is the significance of numerical integration in two dimensional finite element analysis? Explain in detail by giving examples. **07**

Q.5 **(a)** What is function of displacement model? Discuss significant of selection of displacement model. **07**

(b) Explain consistent mass matrix approach for dynamic analysis using finite element with illustrative example. **07**

OR

Q.5 **(a)** Write the Governing equation and boundary conditions used to completely define a rod extrusion problem. Also derive it's weak form. **07**

(b) Derive stress- strain matrix for three dimensional planner bodies. **07**

****