Seat No.: _____ Enrolment No._____

GUJARAT TECHNOLOGICAL UNIVERSITY

M.E –IIst SEMESTER–EXAMINATION – JULY- 2012

Subject code: 1720901 **Date: 06/07/2012**

Subject Name: Finite Element Method

Time: 10:30 am – 13:00 pm **Total Marks: 70**

Instructions:

1. **Attempt all questions.**
2. **Make suitable assumptions wherever necessary.**
3. **Figures to the right indicate full marks.**

Q.1 **(a)** Discuss and Explain the Stepwise procedure for finite element analysis. **07**

(b) For the axially loaded bar as shown in figure 1, determine the nodal displacements and element stresses. For steel, E = 25x10^6 N/cm^2 and take poisson's ratio as 0.25 **07**

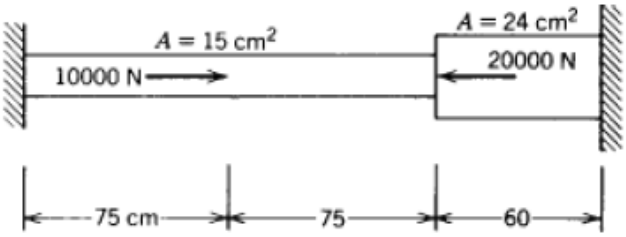

Figure 1

Q.2 **(a)** Explain function of displacement model and discuss significance of selection of proper displacement model. **07**

(b) Explain the formulation of a frame element that would enable us to model a buckling problem? **07**

OR

(b) Derive the shape function for linear distribution. **07**

Q.3 **(a)** Explain the weighted residual method for finite element formulation. **07**

(b) Sketch the FEA model showing the boundary conditions and type of element for the following: **07**

i) Connecting Rod ii) A plate with a central square hole subjected to in-plane load.

OR

Q.3 **(a)** For the axially loaded bar undergoing a temperature rise of 10° C as shown in figure 2 , determine the nodal displacements and element stresses using penalty approach. Take, E = 20x10^6 N/cm^2 and α = 10 x 10^{-6} /°C. **07**

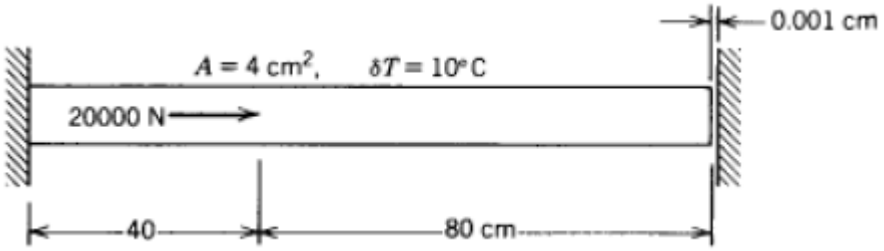

Figure 2

(b) Explain consistent mass matrix approach for dynamic analysis using finite element with illustrative example. **07**

Q.4 **(a)** For a CST element show that in case of plane stresses, the stresses are given as **07**

$$\begin{Bmatrix} \sigma_x \\ \sigma_y \\ \tau_{xy} \end{Bmatrix} = \frac{E}{1-\mu^2}\begin{bmatrix} 1 & \mu & 0 \\ \mu & 1 & 0 \\ 0 & 0 & 0.5(1-\mu) \end{bmatrix}\begin{Bmatrix} \varepsilon_x \\ \varepsilon_y \\ \gamma_{xy} \end{Bmatrix}$$

(b) Explain the applications of different types of boundary conditions in detail. **07**

OR

Q.4 (a) For the two-bar truss as shown in figure-3, if the thermal stresses are introduced by increase in temperatures as shown in the fig. then determine the displacements and stresses in each of the members. E=70 GPa, A=200 mm^2 for both members and $\alpha = 12 \times 10^{-6}$ per ^{O}C. **07**

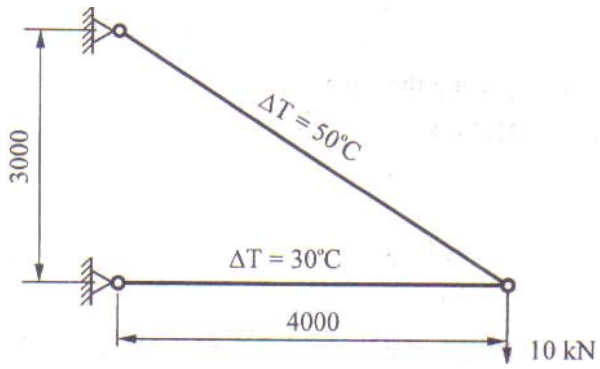

Figure 3

Q.4 (b) A four bar truss is shown in fig. 4. Assuming that for each element, the cross-sectional area is 450mm^2 and modulus of elasticity is 200 Gpa, determine the deflections and stresses in each elements. **07**

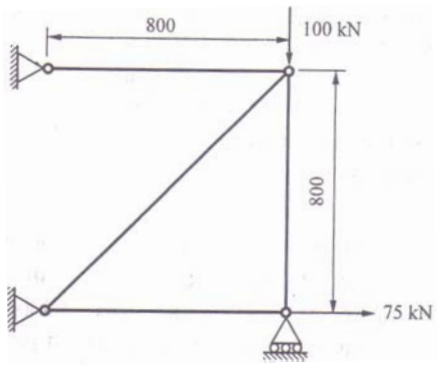

Figure 4

Q.5 (a) Explain the application of FEM for solving a truss problem with a suitable example. **07**

(b) Analyze beam as shown in fig. 5 by using FEM. Consider constant EI and K = 75EI / L^3 **07**

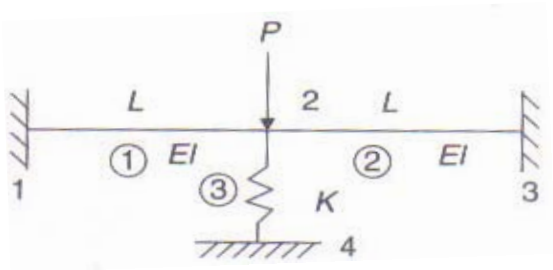

Fig. 5

OR

Q.5 (a) Explain in brief plane stress and plane strain problems in detail. **07**

(b) For Point P located inside the triangle as shown in fig 5, the shape functions N1 and N2 are 0.2 and 0.3 respectively. Determine the coordinates of Point P. **07**

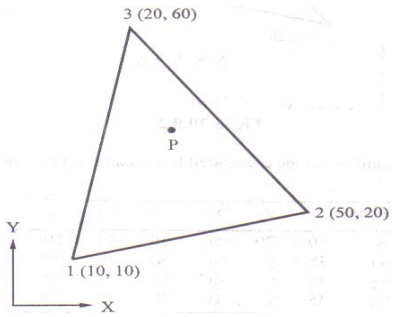

Fig.5

****