Seat No.: _____ Enrolment No._____

GUJARAT TECHNOLOGICAL UNIVERSITY

M.E –IIst SEMESTER–EXAMINATION – JULY- 2012

Subject code: 1720906 **Date: 12/07/2012**

Subject Name: Robotics

Time: 10:30 am – 13:00 pm **Total Marks: 70**

Instructions:

1. **Attempt all questions.**
2. **Make suitable assumptions wherever necessary.**
3. **Figures to the right indicate full marks.**

Q.1 **(a)** (1) Explain Rectangular and PUMA configuration of robot **04**

(2) Define the following : **03**

Resolution , Degree of Freedom, Load carrying capacity , Work volume

(b) What is forward kinematics and inverse kinematics ? Explain with at least one example **07**

Q.2 **(a)** Derive D-H Parameter matrix .Also discuss its importance in robotics **07**

(b) For a three degree of freedom (RPP) manipulator arm shown in figure1.a , Obtain the orientation and position of tool point P . $\Theta_1 = 80^o$, $D_2 = 60$ mm , $D_3 = 90$ mm. Where ai αi di Θi are link parameters. **07**

Link I	ai	αi	di	Θi	qi
1	0	0	0	Θ1	Θ_1
2	0	-90	D_2	0	D_2
3	0	0	D_3	0	D_3

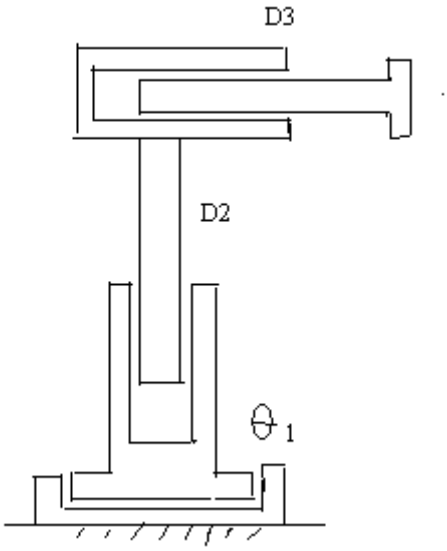

OR

(b) Determine joint variable for 4 dof RPPR manipulator , the joint link transformation matrices, with joint variables Θ_1 , d_2 , d_3 and Θ_4 are. Where C = costheta, S = sintheta. Link transformation matrices are given below. **07**

$$^{0}T_1(\Theta_1) = \begin{vmatrix} C1 & -S1 & 0 & 0 \\ S1 & C1 & 0 & 0 \\ 0 & 0 & 1 & 0 \\ 0 & 0 & 0 & 1 \end{vmatrix} \qquad ^{1}T_2(d_2) = \begin{vmatrix} 1 & 0 & 0 & 0 \\ 0 & 0 & 1 & 0 \\ 0 & -1 & 0 & d2 \\ 0 & 0 & 0 & 1 \end{vmatrix}$$

$$^{2}T_3(d_3) = \begin{vmatrix} 1 & 0 & 0 & 4 \\ 0 & 1 & 0 & 0 \\ 0 & 0 & 1 & d3 \\ 0 & 0 & 0 & 1 \end{vmatrix} \qquad ^{3}T_4(\Theta_4) = \begin{vmatrix} C4 & -S4 & 0 & 0 \\ S4 & C4 & 0 & 0 \\ 0 & 0 & 1 & 0 \\ 0 & 0 & 0 & 1 \end{vmatrix}$$

If the total configuration matrix is given instant is as given below, obtain the magnitude of each joint variable.

$$T_E = \begin{vmatrix} -0.25 & 0.43 & -0.86 & -89.1 \\ 0.43 & -0.75 & -0.5 & -45.67 \\ -0.86 & -0.5 & 0 & 50 \\ 0 & 0 & 0 & 1 \end{vmatrix}$$

Q.3 (a) Which are the different methods of programming of robot? Explain Lead through in brief. **07**

(b) What do you mean by robotic vision? Explain different types of vision sensors. **07**

OR

Q.3 (a) Name the sensors used in robot. Explain about tactile sensors. **07**

(b) Explain robot centered compliance (RCC) device for assembly operation **07**

Q.4 (a) Write a short note on hydraulic motor **07**

(b) One joint of an assembly robot manipulator is required to move from $\Theta 2 = 60°$ to 180° in 5 seconds. Find the cubic polynomial to generate the smooth trajectory of joint. What is the maximum velocity and acceleration for this joint Assume initial and final velocity zero? **07**

OR

Q.4 (a) The second joint of SCARA manipulator is required to move from 60º to 180º in 4 seconds. Find the cubic polynomial to generate the smooth trajectory for the joint. What is the maximum velocity and acceleration for this trajectory? **07**

Q.4 (b) Describe types of actuators used for robotic manipulator **07**

Q.5 (a) What is usefulness of Force sensors in robot? Describe any one force sensor in detail. **06**

(b) Why dynamics is required for robot? Distinguish between Langrangian and Newtonian Mechanisms. With suitable example for each. **08**

OR

Q.5 (a) Define and describe calibration, coordinated motion and automatic scheduling. **07**

(b) Discuss considerations in gripper selection and design **07**

****