Seat No.: _____ Enrolment No._____

GUJARAT TECHNOLOGICAL UNIVERSITY

M.E –IIst SEMESTER–EXAMINATION – JULY- 2012

Subject code: 1724103 **Date: 10/07/2012**

Subject Name: Error Control Coding In Communication

Time: 10:30 am – 13:00 pm **Total Marks: 70**

Instructions:

1. **Attempt all questions.**
2. **Make suitable assumptions wherever necessary.**
3. **Figures to the right indicate full marks.**

Q.1 **(a)** (i) If C is a valid code vector, then prove that $CH^T=0$ where H^T is the transpose of the parity check matrix H. **04**

(ii) Prove that all 2^k n-tuples of a coset have the same syndrome and the syndromes for different cosets are different. **03**

(b) Consider a systematic block code whose parity- matrix is **07**

$$P = \begin{bmatrix} 1 & 1 & 1 & 0 \\ 1 & 0 & 1 & 1 \\ 0 & 1 & 1 & 1 \\ 1 & 1 & 0 & 1 \end{bmatrix}$$

(i) Find the generator matrix and parity-check matrix for this code.
(ii) How many errors can the code detect and correct?
(iii) Is the vector 10101010 a codeword?
(iv) Draw the corresponding syndrome calculation circuit.

Q.2 **(a)** (i) Explain maximum likelihood decoding for error control coding **04**

(ii) Prove that Let $g(x) = g_0+g_1x+\ldots..+g_{r-1}x^{r-1}+x^r$ be the nonzero code polynomial of minimum degree in (n, k) cyclic code C. then, the constant term g_0 must be equal to 1. **03**

(b) A (15,5) linear cyclic code has a generator polynomial **07**

$$g(x) = 1+x+x^2+x^4+x^5+x^8+x^{10}$$

(i) Draw the block diagram of an encoder for this code.
(ii) Find the code polynomial for the message polynomial $D(x)=1+x^2+x^4$ in systematic form by listing the state of the registers.
(iii) Is $v(x) =1+x^4+x^6+x^8+x^{14}$ a code polynomial?

OR

(b) Consider a (15,11) cyclic code generated by $g(x) = 1+x+x^4$. Devise a feedback shift register encoder circuit. Illustrate the encoding procedure with the message vector 10010110111 by listing the state of the registers and Draw the syndrome calculation circuit. **07**

Q.3 **(a)** (i) Bring out advantages of cyclic code over linear block code **03**

(ii) Consider a (127,92) linear block code capable of triple error corrections **04**

I. What is the probability of message error for an uncoded block of 92 bits if the channel symbol error probability is 10^{-3}?

II. What is the probability of message error when using the (127,92) block code if the channel symbol error probability of 10^{-3}?

(b) The (7,4) cyclic code is generated by $g(x) = 1+x^2+x^3$. Find the syndrome of the received message vector $r(x)=x+x^3+x^5$ by listing the state of the registers. Is it a code vector? If no, then correct using Meggitt decoder circuit. **07**

OR

Q.3 **(a)** Draw the general block diagram of Meggitt decoder circuit and explain its operation **07**

(b) Consider the (3,1,2) convolutional code with $g^{(1)}=(110)$,$g^{(2)}=(101)$ and $g^{(3)}=(111)$. **07**

(i) Draw the encoder block diagram.
(ii) Find the generator matrix
(iii) Find the code-word corresponding to the information sequence (11101) using time-domain and transform domain approach.

Q.4 **(a)** Explain encoding of convolution codes using time domain approach with an example. **07**

(b) Consider the convolution encoder shown in figure1.the code is systematic. **07**

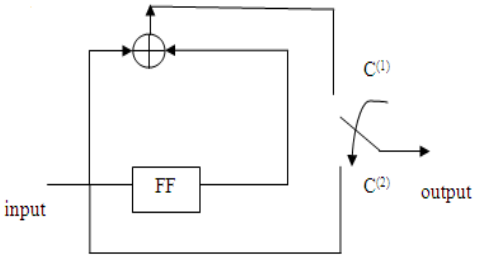

Figure 1

(i) Draw the state diagram
(ii) Draw the code tree.
(iii) Find the encoder output produced by the message sequence 10111.
(iv) Verify the output using time-domain approach.

OR

Q.4 **(a)** What are RS codes? How are they formed? **07**

Q.4 **(b)** For the convolutional encoder shown in figure 2. **07**

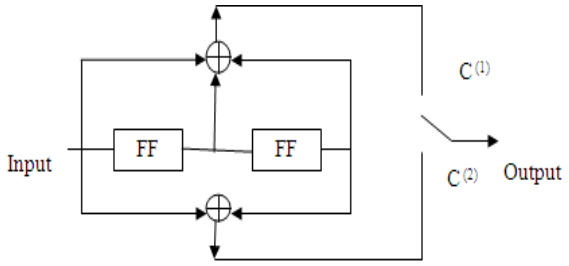

Figure 2

(i) Draw the state and trellis diagrams and determine the output digit sequence for the data digits 10111.
(ii) Use viterbi's algorithm to decode the received sequence: 1001011000 and find the message.

Q.5 **(a)** Explain MAP algorithm. **07**

(b) (i) write a short note on interleaved codes **03**

(ii) Figure 3 shows a turbo encoder. The message bit sequence to encode is m=1 0 1 1 0 1 0 0 with leftmost bit entering the encoder first. The bit position change by the interleaver is shown in figure. Find out encoded output sequence. **04**

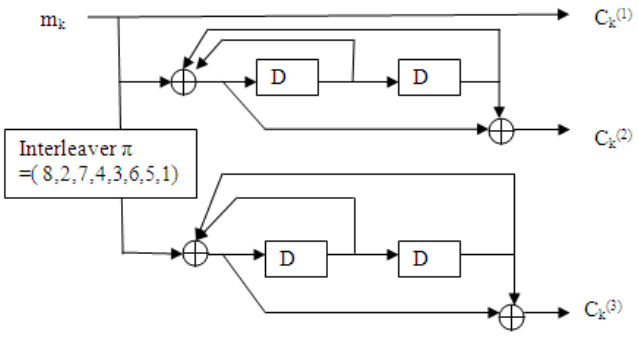

Figure 3

OR

Q.5 **(a)** Explain EG-LDPC code. **07**

(b) For m=3, there exists a (7,4) code generated by $g(x)=1+x+x^3$. Suppose that it is shorten by one digit. **07**

(i) Draw the block diagram of an encoder
(ii) Draw the block diagram of a decoder
(iii) Is the vector 101010 a codeword? If no, the correct it.

****