Seat No.: _____ Enrolment No._____

GUJARAT TECHNOLOGICAL UNIVERSITY

M.E –Ist SEMESTER–EXAMINATION – JULY- 2012

Subject code: 710707N **Date: 11/07/2012**

Subject Name: Modern Power System Protection

Time: 2:30 pm – 05:00 pm **Total Marks: 70**

Instructions:

1. **Attempt all questions.**
2. **Make suitable assumptions wherever necessary.**
3. **Figures to the right indicate full marks.**

Q.1 **(a)** Draw block diagram of basic components of a digital relay. Also explain function of sample and hold circuit. **07**

(b) Explain following terms with reference to digital relay **07**

(1) Signal aliasing error (2) Anti Aliasing filters.

Q.2 **(a)** What is LINKNET? Draw the flowchart for plug setting determination. **07**

(b) With the help of flow charts explain the steps of the algorithm used to determine the primary and backup relay. **07**

OR

(b) Using the flow chart and algorithm find out the backup relay of primary relay R_1 for the single line diagram of power system shown in fig. **07**

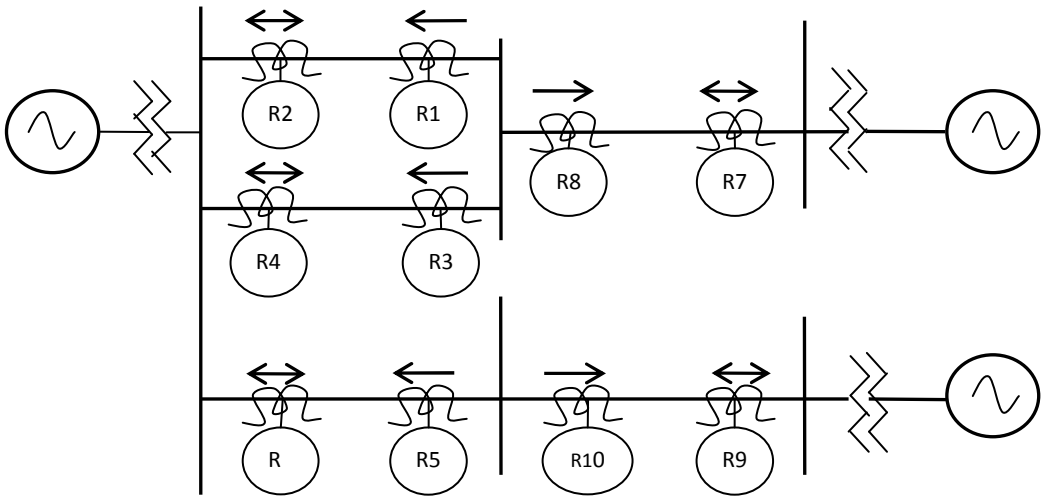

Q.3 **(a)** Explain following terms with reference to Reclosing relay. **07**

(1) Instantaneous-Trip Lockout.
(2) Deionizing time for three-pole reclosing.
(3) Selective reclosing.

(b) What do you mean by "Synchronism Check". Explain with suitable diagram. **07**

OR

Q.3 **(a)** Explain the working of single-shot solid state reclosing relay. **07**

(b) Explain considerations for applications of instantaneous reclosing. Also state factors governing application of reclosing. **07**

Q.4 **(a)** Explain frequency response during overload. **07**

(b) Explain the following problems that occur in the protection of transmission lines **07**

due to the presence of series capacitors.
(i) Phase impedance unbalance (ii) Transient phenomena
(iii) Sub synchronous resonance

OR

Q.4	**(a)**	Explain criteria which must be considered during a design of load-shedding schemes for specific systems.	**07**
	(b)	Explain basic working principle of relays based on Travelling Waves for internal and external faults.	**07**
Q.5	**(a)**	Explain the of voltage and current inversions on impedance measured by the relay for midline series compensation and end-of-line series compensation.	**07**
	(b)	Explain Fourier-analysis-based algorithm. Also explain half cycle window algorithm.	**07**

OR

Q.5	**(a)**	Explain relaying problems associated with series compensated lines	**07**
	(b)	Explain the concept of following techniques with reference to relay algorithms. (i) Differential equation based technique (ii) Least square error based technique	**07**

****