Seat No.: _____ Enrolment No._____

GUJARAT TECHNOLOGICAL UNIVERSITY

ME - SEMESTER–I (New) EXAMINATION – WINTER 2016

Subject Code:2710907 **Date:06/01/2016**

Subject Name: Advanced Engineering Dynamics

Time:2:30 PM to 5:00 PM **Total Marks: 70**

Instructions:

1. **Attempt all questions.**
2. **Make suitable assumptions wherever necessary.**
3. **Figures to the right indicate full marks.**

Q.1 **(a)** Prove that the virtual work done by the inertia forces is equal to the time rate of change of work done by the momentum minus the virtual change in kinetic Energy. **07**

(b) Arm AB is turned by a motor at a constant rate of 1800 rev/min. Cap B connects this bar BC with a fork and clevis joint, and the cap is free to rotate about the AB axis. The connection between bar BC and collar C is a ball-and socket joint. Determine the velocity and acceleration of collar C and the angular velocity and angular acceleration of bar BC when the system is in the position shown in figure. **07**

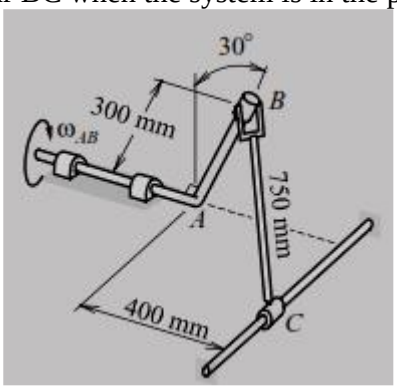

Q.2 **(a)** A right circular cone is defined by $x^2 + y^2 = 9z^2$, (x, y, and z have unit of millimeters). The vertical position of a block sliding along the interior of such a cone is observed to be $Z = 480 - 80t^2$, and $X = y^2/200$. Also, y>0 throughout the motion. Determine the velocity and acceleration of the block when t = 2s. **07**

(b) Derive Newton-Euler equation of motion for rigid bodies. **07**

OR

(b) Derive the momentum and energy principles for rigid bodies. **07**

Q.3 **(a)** Derive the velocity and acceleration relations for a particle moving on a curved path using (r, θ) coordinate system. **07**

(b) Derive formulation with Quasi-Coordinates. **07**

OR

Q.3 **(a)** Explain Lagrange equation with constraints. **07**

(b) Discuss; Eulerian Angles. **07**

Q.4 **(a)** Explain the Hamilton principle. **07**

(b) Discuss the general procedural steps for Newton-Euler Equations of motion. **07**

OR

Q.4 **(a)** Collar B is pinned to arm AB as it slides over a circular angular bar. The guide bar translates to the left at a constant speed ı, such that the distance from pivot A to the center C is ıı. Derive the expression for the angular velocity of collar B. **07**

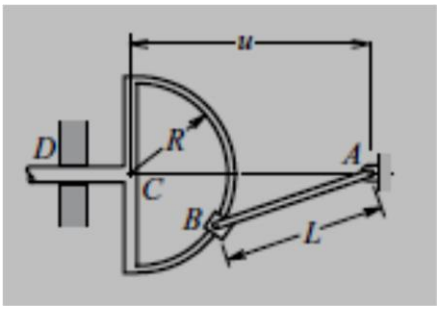

(b) Definition of Generalized forces. **07**

Q.5 **(a)** Discuss the nonholonomic Hamilton principle with suitable example. **07**

(b) Derive the Lagrange form of Newton equation of motion. **07**

OR

Q.5 **(a)** The airplane climbs at a constant speed v and at a constant climb angle β. The airplane is being tracked by a radar station at point A on the ground. Determine the radial velocity and angular velocity as a function of the tracking angle θ. **07**

(b) Explain the concept of joint kinematical analysis. **07**

****