Seat No.: _____ Enrolment No._____

GUJARAT TECHNOLOGICAL UNIVERSITY

ME – SEMESTER-1 (NEW) EXAMINATION – WINTER 2016

Subject Code: 2711608 **Date:03/01/2017**

Subject Name: Chemical System Modeling & Simulation

Time: 2:30 pm to 5:00 pm **Total Marks: 70**

Instructions:

1. **Attempt all questions.**
2. **Make suitable assumptions wherever necessary.**
3. **Figures to the right indicate full marks.**

Q.1 **(a)** Give detailed classification of models in chemical engineering with proper examples. **07**

(b) Explain modular approaches to process simulation and equation solving approach. **07**

Q.2 **(a)** The pressure and volume of a gas are related by the equation $PV^{\gamma} = K$. Fit this equation to the following set of data: **07**

P (kg/cm^2)	0.5	1.0	1.5	2.0	2.5	3.0
V (L)	1.62	1.00	0.75	0.62	0.52	0.46

(b) Develop a mathematical model for temperature profile on a rectangular fin with usual notations. **07**

OR

(b) Derive Kemser-Brown equation with usual notations for a continuous solvent extraction by 'N' stages at steady state. **07**

Q.3 **(a)** For consecutive reversible reactions in series at constant volume, A↔ B and B ↔ C, derive relation for rate of disappearance of A, number of moles of A and various rate constants. **07**

(b) Develop relation for momentum flux and velocity distribution for a laminar flow of Newtonian fluid in a narrow slit. **07**

OR

Q.3 **(a)** Develop equation of continuity from Lagrangian point of view. **07**

(b) N_0 gram of a solid material was placed in W gram of water at time t=0. The liquid was continuously stirred and maintained at constant temperature. At the end of very long time N_f gram of solid remains undissolved which can be taken as zero for practical purpose. The solid consisted of S sphere each of initial diameter D_0 meter. Obtain variation of diameter of solid as function of time. **07**

Q.4 **(a)** For the process flow sheet given in Figure 1, do the following: **10**

i. draw the digraph
ii. form the process matrix
iii. form the incidence matrix
iv. form the node adjacency matrix
v. form the stream adjacency matrix

(b) Differentiate between digraph and signal flow graph. **04**

OR

Q.4	**(a)**	Determine the cut-set for the digraph given in Figure 2 using Ollero-Amselem algorithm. Show the steps in detail.	**10**
	(b)	Differentiate between analysis mode and design mode in simulation.	**04**
Q.5	**(a)**	Discuss the importance of databanks in simulation software and the different types.	**07**
	(b)	Explain the common features of commercial process simulation software.	**07**

OR

Q.5	**(a)**	List the commercially available simulation softwares. Explain any one in detail.	**07**
	(b)	Explain Barkley & Motard algorithm. Write the steps in detail.	**07**

****

Figure 1

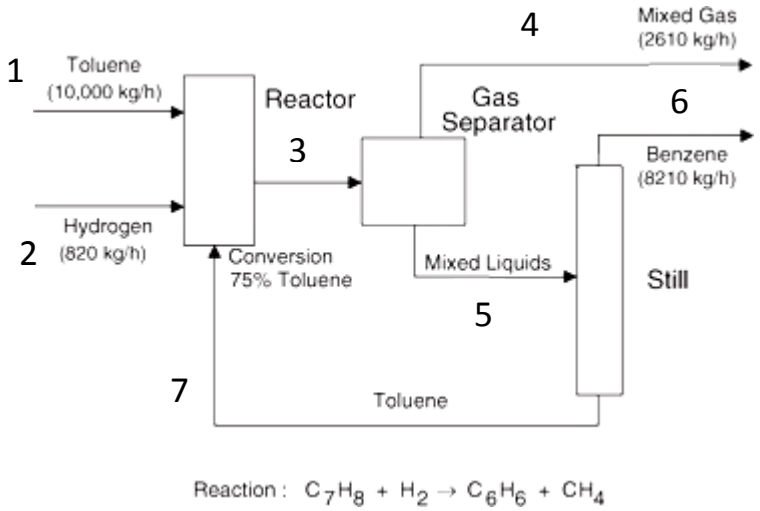

Figure 2