Seat No.: _____ Enrolment No._____

GUJARAT TECHNOLOGICAL UNIVERSITY

ME – SEMESTER III (NEW) – EXAMINATION – WINTER-2016

Subject Code: 2730709 **Date:25/10/2016**

Subject Name: Modeling and Analysis of Power Converters

Time:02:30 pm to 05:00 pm **Total Marks: 70**

Instructions:

1. **Attempt all questions.**
2. **Make suitable assumptions wherever necessary.**
3. **Figures to the right indicate full marks.**

Q.1 **(a)** (i) What is the purpose of averaging the various quantitites (inductor current, capactior voltage etc.) over a switching period? How does it help in modeling? **07**

(ii) Why do the gain and the efficiency of boost converter decreases as the duty cycle approaches towards unity?

(b) Obtain small signal ac equivalent model of a non-ideal Buck-Boost converter using state-space approach. Consider on-state resistance of the switch as R_{on} as and diode shall be modeled as an independent voltage source V_D. Ignore all other losses. **07**

Q.2 **(a)** Show the complete block diagram representing the mathematical model of a converter and its closed loop feedback control system. Hence, discuss the effect of negative feedback on the disturbance in the output and variation in forward loop gain. **07**

(b) For the following converter the switches operate synchronously: each in position 1 for $0 < t < DT_s$ and in position 2 for $DT_s < t < T_s$. The inductor has winding resistance R_L. Derive an expression for the non-ideal voltage conversion ratio V/V_g. Also derive an expression for the efficiency. **07**

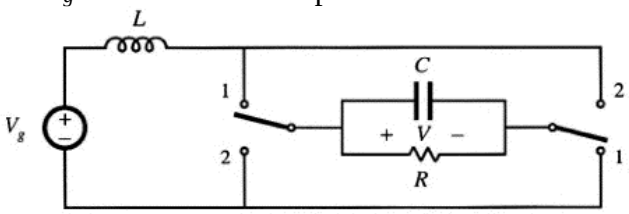

OR

(b) With suitable example explain the process of obtaining a Canonical model for a dc-dc converter. **07**

Q.3 **(a)** Utilizing MiddleBrook's extra element theorem, evaluate the transfer function v_2/v_1 for the following circuit. **07**

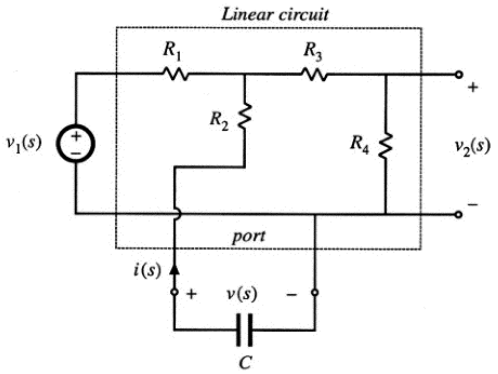

(b) Derive the equation for a line-to-output transfer function for a Buck converter. **07**

OR

Q.3 **(a)** For a Buck converter having following parameters obtain the magnitude and phase Bode plots for open loop line to output transfer function. **07**

V_g = 100V; V_o = 40V; L = 0.4mH; C = 100μF; R=2Ω.

(b) The Boost converter in the following figure contains a feedback loop which causes the converter input current $i_g(t)$ to be proportional to reference v_{ref}. The feedback connection is a current sense circuit with a gain $H(s)$ = 0.2 V/A. The pulse-width modulator has the sawtooth waveform with peak-peak amplitude of V_M = 3V. The quiescent values of the inputs are V_g = 120V and V_{ref} = 2V. All elements are ideal. Determine the quiescent values D, V and I_g. **07**

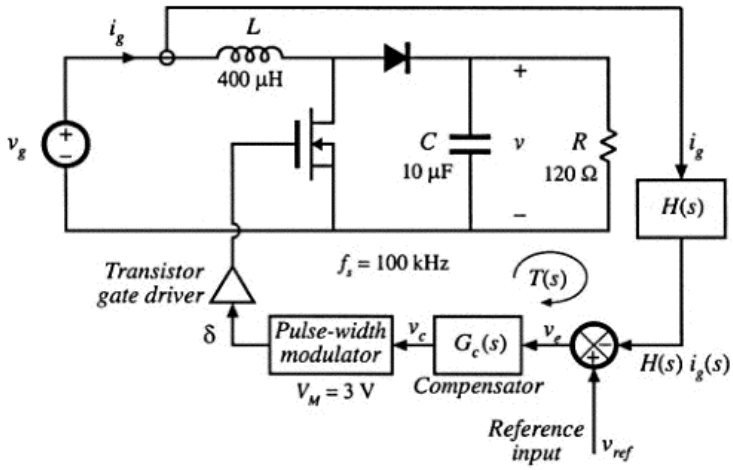

Q.4 **(a)** For the circuit shown below, construct the (asymptotic) magnitude Bode plot for the Thevenin-equivalent output impedance Z_{out}. Mention approximate analytical expressions and numerical values for the important corner frequencies and asymptotes. **07**

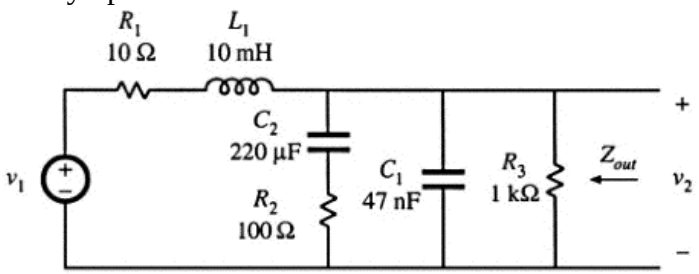

(b) Discuss the issues related to undamped input filter on the performance of DC-DC converter. Hence, calculate the various options for overcoming the limitations. **07**

OR

Q.4 **(a)** Obtain the averaged large-signal equivalent circuit for a duty-controlled Boost converter operating in DCM. Also derive the equation for voltage gain M for DCM operation. **07**

(b) Obtain the large signal (DC and AC small signal) averaged switch network model of an ideal boost converter operating in CCM. Apply the concept of switch network or circuit averaging. **07**

Q.5 **(a)** Prove that the high frequency pole of a converter operating in DCM is always greater than approximately one-third of a switching frequency. **07**

(b) Derive the control-to-output and line-to-output transfer function for current programmed DC-DC converter operating in CCM. **07**

OR

Q.5 **(a)** Discuss the significance of an artificial ramp for current-programmed control of a converter. Also, derive the necessary condition that is required to ensure the stability. **07**

(b) For the following functional block diagram of a Buck-Boost converter operating with a current-programmed control show that **07**

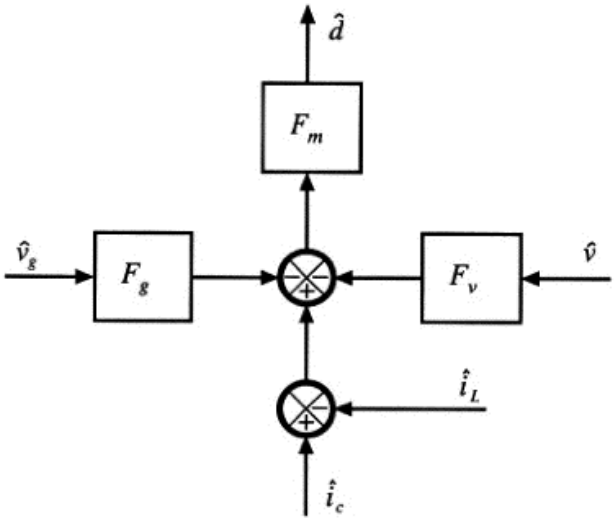

$F_g = \frac{D^2 T_s}{2L}$; $F_v = \frac{-(1-D)^2 T_s}{2L}$ and $F_m = \frac{1}{M_a T_s}$

****