Seat No.: _____ Enrolment No._____

GUJARAT TECHNOLOGICAL UNIVERSITY

M. E. - SEMESTER – II • EXAMINATION – WINTER 2012

Subject code: 1720801 **Date: 29-12-2012**

Subject Name: Finite Element Method

Time: 10.30 am – 01.00 pm **Total Marks: 70**

Instructions:

1. **Attempt all questions.**
2. **Make suitable assumptions wherever necessary.**
3. **Figures to the right indicate full marks.**

Q.1 **(a)** Describe the typical applications of FEA. Write down the procedure for finite element analysis. **07**

(b) Write the properties of global stiffness matrix of a bar element. Explain the importance of band width in a global stiffness matrix. **07**

Q.2 **(a)** Explain the following **07**

i) Principle of Minimum Potential Energy

ii) Principle of Virtual Work.

(b) The structure shown in Figure 1 is subjected to an increase in temperature of 80°C. Determine all nodal displacements and stress only in the bronze part. **07**

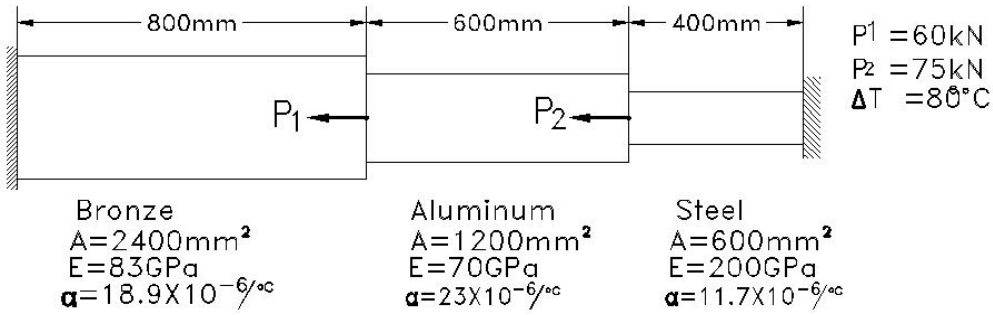

Figure 1

OR

(b) For a system shown in Figure 2, determine the displacements and stresses. Assume modulus of elasticity as 80 X 10^3 N/mm^2 and cross sectional area as 225 mm^2. **07**

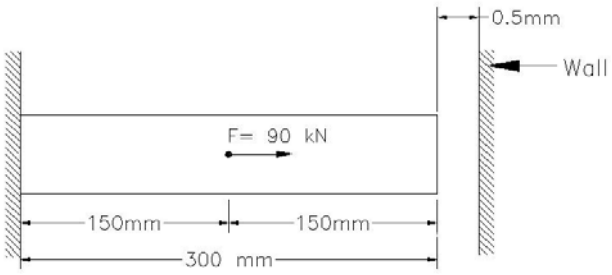

Figure 2

Q.3 **(a)** The quality of the solution of FEA largely depends upon the type, size and number of elements. Justify the statement giving examples. **07**

(b) Explain the following terms with reference to a FEA software **07**

i) Preprocessing ii) Solution iii) Post Processing

OR

Q.3 **(a)** Discuss in detail the importance of convergence in a finite element analysis. **07**

(b) Explain various mesh generation techniques in FEM. **07**

Q.4 (a) Explain the terms Plane Stress and Plane Strain. Explain how will you solve a plane stress problem using FEA software. **07**

(b) For the two bar truss shown in Figure 3, determine the nodal displacements and element stresses. A force of P = 1000 KN is applied at node 1. Assume E = 210 GPa and A = 600 mm^2 for each element. **07**

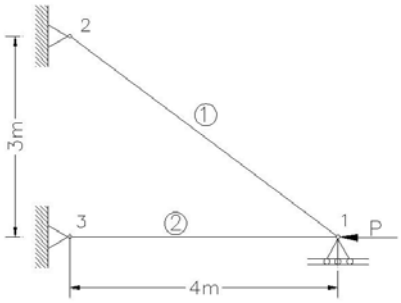

Figure 3

OR

Q.4 (a) What is the difference between plane truss and space truss? Discuss the FEM formulation of a plane truss. **07**

Q.4 (b) Determine the temperature distribution through the composite wall shown in Figure 4 when convection heat loss occurs on the left surface. Assume unit area. Assume all thicknesses, t1 = 4 cm and t2 = 2 cm; k1 = 0.5 W/cm°C, k2 = 0.05 W/cm°C, h = 0.2 W/cm^2°C and T∞ = -10°C. **07**

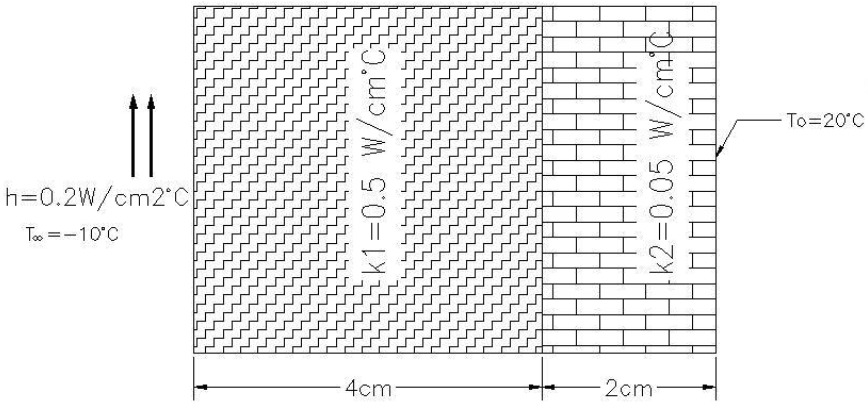

Figure 4

Q.5 (a) How will you formulate a one dimensional fin problem to find temperature distribution? **07**

(b) A beam fixed at one end and supported by a roller at the other end, has a 20 KN concentrated load applied at the center of the span (Figure 5). Calculate the deflections under the load. **07**

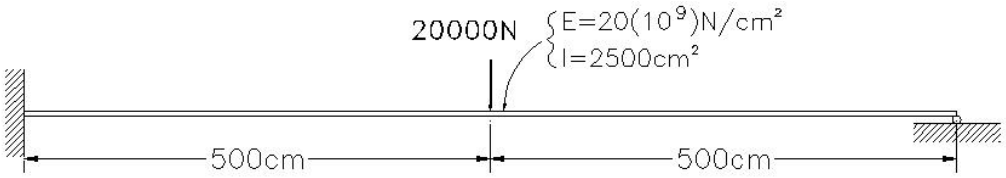

Figure 5

OR

Q.5 (a) Explain how will you find natural frequency of vibration for uniform bar fixed at one end; with length L, area of cross section A, Young's modulus E and density ρ. Start from elemental stiffness matrix. **07**

(b) List various FEA softwares available in the market. Discuss the points to be considered for purchasing FEA software. How will you compare capabilities of two FEA softwares. **07**

****