Seat No.: _____ Enrolment No._____

GUJARAT TECHNOLOGICAL UNIVERSITY

M. E. - SEMESTER – II • EXAMINATION – WINTER 2012

Subject code: 1720902 **Date: 31-12-2012**

Subject Name: Geometric Dimensioning and Tolerancing

Time: 10.30 am – 01.00 pm **Total Marks: 70**

Instructions:

1. **Attempt all questions.**
2. **Make suitable assumptions wherever necessary.**
3. **Figures to the right indicate full marks.**
4. **Assume Required data where ever required.**

Q.1 **(a)** What are the advantages of Geometric dimensioning and Tolerancing over coordinate dimensioning? **07**

(b) Using below given fig.1 Complete the following table **07**

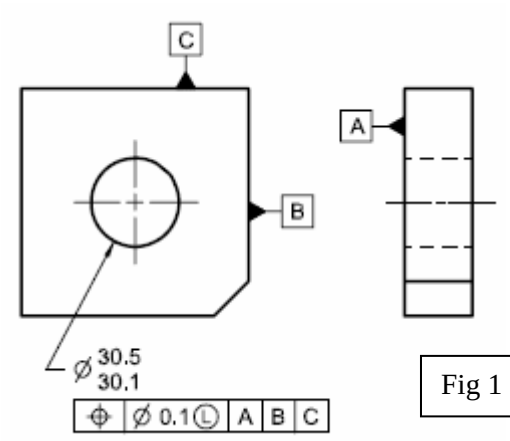

Fig 1

	Ø Hole	Ø Tolerance	Virtual Condition	Resultant Condition
LMC				
MMC				

Q.2 **(a)** What is the cylindrical tolerance zone explain with figure? **07**

(b) Specify a circularity tolerance of .002 on the cone in the drawing in below given Fig.2. And explain one of the method to measure circularity tolerance **07**

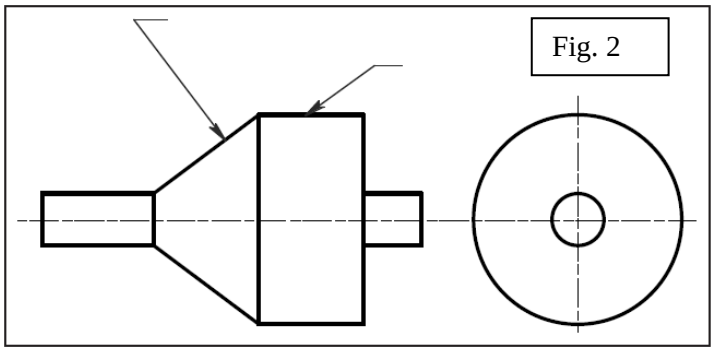

Fig. 2

OR

(b) Design a part that will mate with the component shown in below Fig. 3 **07**

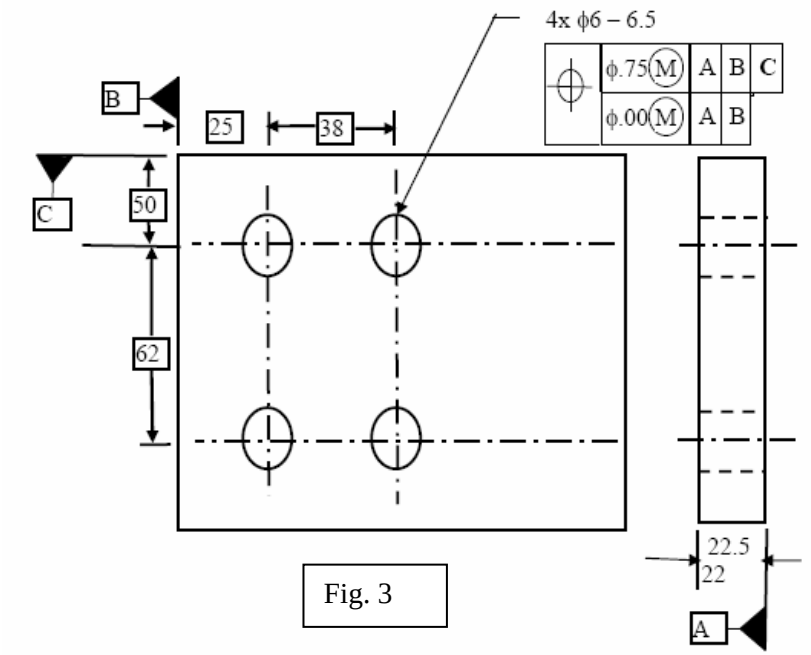

Fig. 3

Q.3 **(a)** Explain the following form tolerances with example **07**
i) Straightness ii) Cylindricity

(b) With suitable example explain Projected Tolerance Zone. **07**

OR

Q.3 **(a)** What is rule #1 or Taylor Rule? **07**

(b) Complete the following Table feature control frame given in table **07**

	Cylindrical Feature Straightness of a median Line	
Feature Size	⏤ Ø0.006	⏤ Ø0.006 Ⓜ
1.030 MMC		
1.020		
1.010		
1.000 LMC		

Q.4 **(a)** What is datum? Explain 3-2-1 Principal with respect to datum. **07**

(b) With the help of suitable examples explain the concept of zero Tolerancing at MMC **07**

OR

Q.4 **(a)** Explain angularity applied to a feature of size with example **07**

Q.4 **(b)** Apply Geometric tolerance to below given fig. 4 and redraw it. **07**

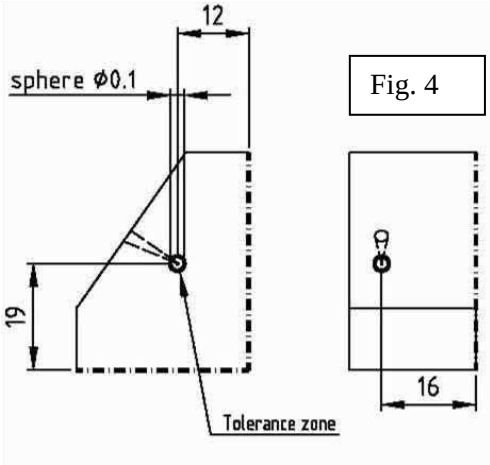

Fig. 4

Q.5 **(a)** What is the minimum distance between the holes and the ends of the part in below given fig. 5? **07**

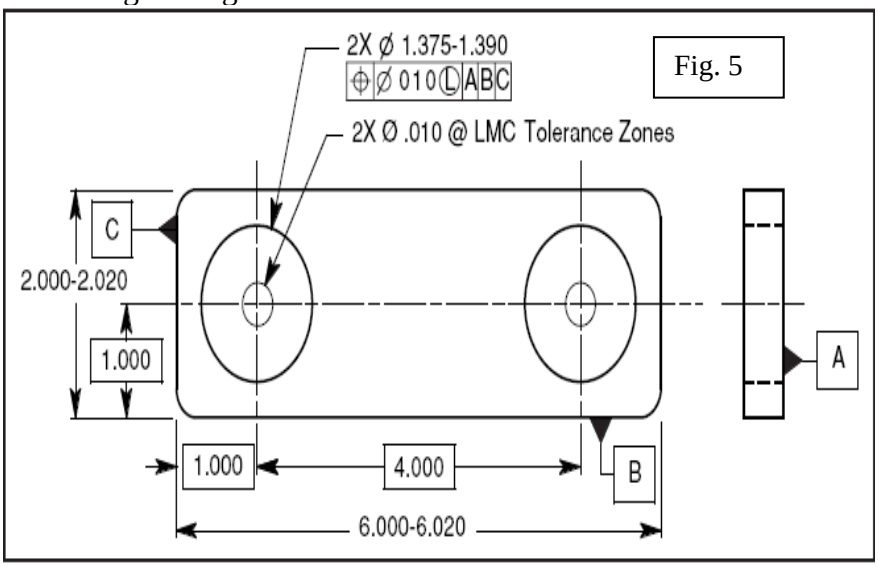

Fig. 5

(b) Provide the appropriate datum feature symbols on the drawing and datums in the feature control frames in below given fig. 6. **07**

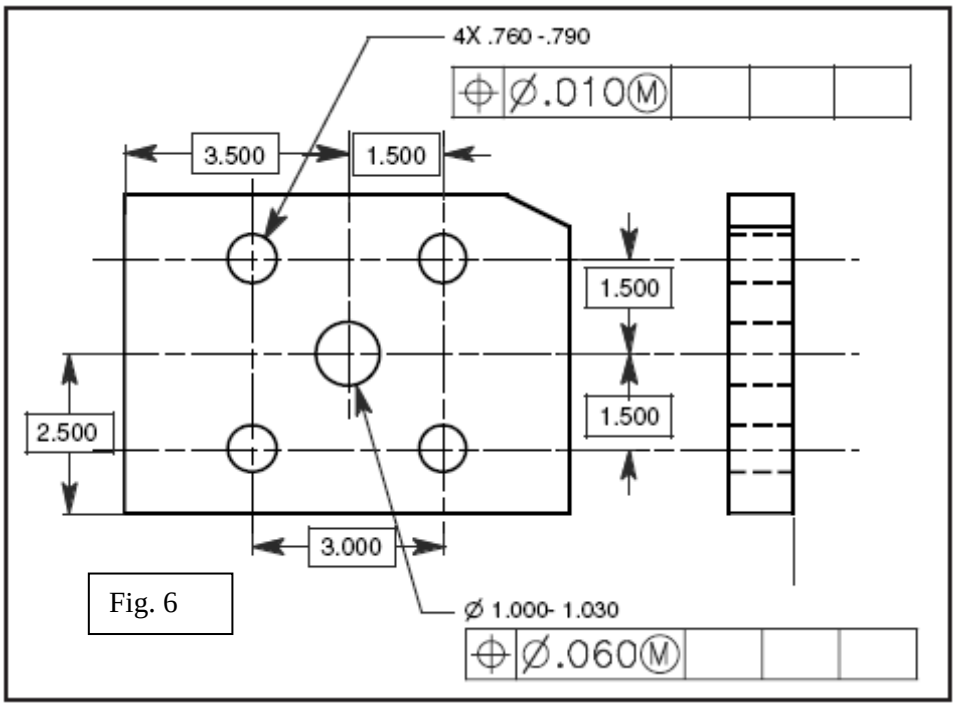

Fig. 6

OR

Q.5 **(a)** Explain profile tolerance with suitable example. **07**

(b) Using fig. 7 complete the below given table **07**

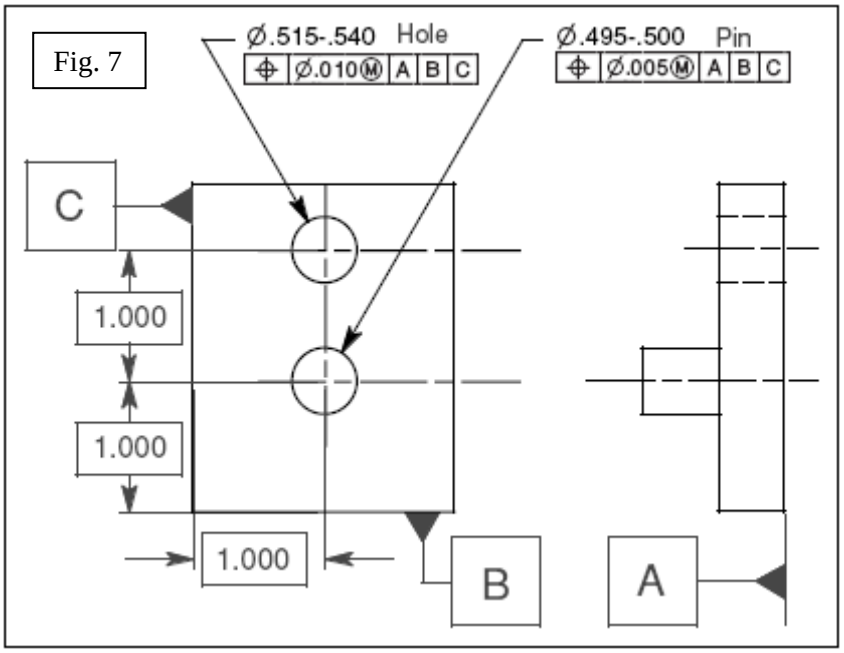

Actual Feature Size	For Hole			Total Positional Tolerance
	MMC	Bonus	Geometric Tolerance	
MMC 0.515				
0.520				
0.525				
0.530				
LMC 0.540				

Actual Feature Size	For Pin			Total Positional Tolerance
	MMC	Bonus	Geometric Tolerance	
MMC 0.500				
0.499				
0.498				
0.497				
0.496				
LMC 0.495				

****