Seat No.: _____ Enrolment No._____

GUJARAT TECHNOLOGICAL UNIVERSITY

M. E. - SEMESTER – II • EXAMINATION – WINTER 2012

Subject code: 1720906 **Date: 02-01-2013**

Subject Name: Robotics

Time: 10.30 am – 01.00 pm **Total Marks: 70**

Instructions:

1. **Attempt all questions.**
2. **Make suitable assumptions wherever necessary.**
3. **Figures to the right indicate full marks.**

Q.1	**(a)**	What is Robot? Explain laws of robotics and classify robot based on generation.	**07**
	(b)	Short note: Application of robots for Material Handling	**07**
Q.2	**(a)**	Explain the types of controller for robot motion control.	**07**
	(b)	For a two segment spline with continuous acceleration at via point, solve for the coefficient of the two cubic, given the requirements as $_0$=8°, $_v$=12°, $_g$=30°. Take the time of each segment as 2 sec.	**07**
		OR	
	(b)	Solve the coefficients of two cubic that are connected in a two segment spline with continuous acceleration at the intermediate via point. The initial angle is $_o$, the via point is $_v$, and the goal point is $_g$.	**07**
Q.3	**(a)**	Define following technical terms in robotics: 1. Accuracy 2. Repeatability 3. Play back robot 4. Resolution	**07**
	(b)	Short note: Robot joint control design.	**07**
		OR	
Q.3	**(a)**	Differentiate between online programming and offline programming	**07**
	(b)	Explain in brief about 'Remote Center Compliance' device (RCC) for assembly operation.	**07**
Q.4	**(a)**	Classify the different gripper mechanisms.	**07**
	(b)	For a given manipulator, are the velocity Jacobian and static force Jacobian different? Explain your answer with an example.	**07**
		OR	
Q.4	**(a)**	Describe different Joint-Link Parameters of the link.	**06**
	(b)	A Frame {2} rotates with respect to frame {1} about z-axis by an angle 30^0. The position of the origin of frame {2} as seen from frame {1} is $[7, 5, 7]^T$. Obtain the transformation matrix ${}^1T_2$. Also find the description of point P in frame {1} if position vector ${}^2P=[5, 8, 3]^T$.	**08**

Q.5 Establish orthonormal link coordinate systems for the PUMA 560 robot arm shown in figure below and complete the DH table. Also derive homogeneous transformation matrix for end-effector. **14**

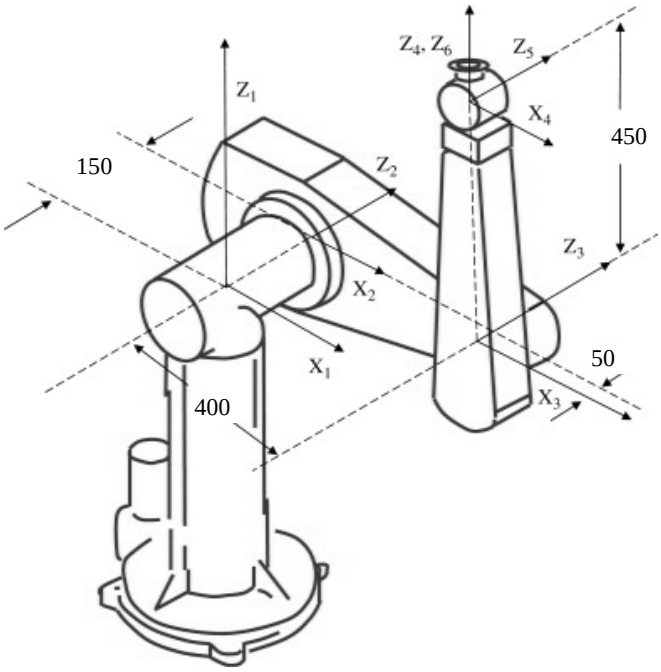

OR

Q.5 For manipulator shown in figure below, obtain the Jacobian matrix. **14**

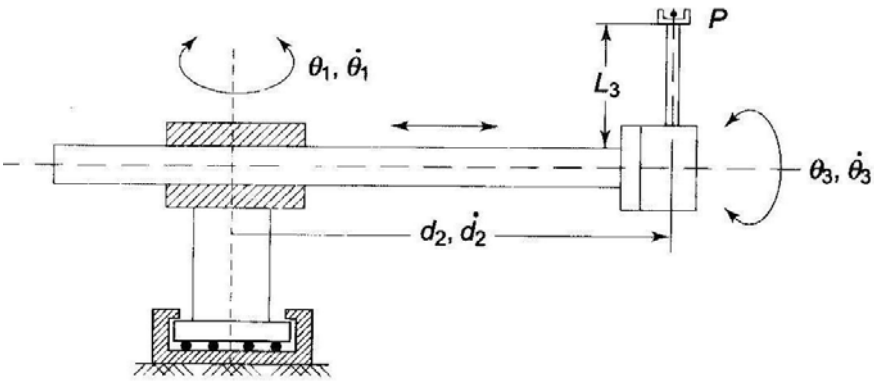

****