Seat No.: _____ Enrolment No._____

GUJARAT TECHNOLOGICAL UNIVERSITY

M. E. - SEMESTER – I • EXAMINATION – WINTER 2012

Subject code: 710703N **Date: 12-01-2013**

Subject Name: Modern Control system

Time: 02.30 pm – 05.00 pm **Total Marks: 70**

Instructions:

1. **Attempt all questions.**
2. **Make suitable assumptions wherever necessary.**
3. **Figures to the right indicate full marks.**

Q.1 **(a)** Define and discuss the concept of state, state variables, state vector and state space. **07**

(b) A schematic diagram representing the dc motor and a load is given in fig-1.The field is maintained constant during operation, assume the motor is operating in the linear region determine the state equations in the vector matrix form for the state variables. **07**

(1) $x^T = [\theta, \dot{\theta}, i_a]$

(2) $x^T = [\theta, \dot{\theta}, \ddot{\theta}]$

Q.2 **(a)** Explain the Krasovskii's theorem for the determination of asymptotic stability for the given non linear control system. **07**

(b) Apply krasovskii method to assess the stability of the equilibrium point x(0) of the system given below **07**

$$\dot{x_1} = x_1$$

$$\dot{x_2} = x_1 - x_2 - \frac{x_2^3}{3}$$

OR

(b) When is a system said to be completely controllable? **07**

For the given transfer function $\frac{Y(s)}{U(s)} = \frac{(s+2.5)}{(s^2+1.5s-2.5)}$.

Comment upon the system Controllability.

.

Q.3 **(a)** Explain the variable gradient method for the determination of liapunov function **07**

(b) Apply variable gradient method to determine the stability of the system given below: **07**

$$\dot{x_1} = -x_1 + 2{x_1}^2 x_2$$

$$\dot{x_2} = -2\,x_2$$

OR

Q.3	**(a)**	Explain the principle of duality that clarify apparent analogy between controllability and observability.	**07**
	(b)	Write a short note on advantages and limitations of state variable approach.	**07**
Q.4	**(a)**	With neat block diagram representations discuss cascade decomposition method.	**07**
	(b)	Using cascade decomposition method obtain the state space representation of the following transfer function $\frac{Y(s)}{U(s)} = \frac{(s+5)(s+1.5)}{(s+2)(s^2+3s+4)}$	**07**

OR

Q.4	**(a)**	Define and explain the concept of controllability and observability and explain the relation ship between them	**07**
	(b)	Define and explain rank of matrix with necessary examples.	**07**
Q.5	**(a)**	An armature controlled dc motor has constant field excitation. It is fed from a constant voltage source. The rotating parts have effective co-efficient moment of inertia J and frictional co-efficient f. The armature resistance and inductance is R and L respectively. For motor shaft output angular position θ, express the system performance in suitable variable form.	**07**
	(b)	Compare classical control theory with the modern control theory.	**07**

OR

Q.5	**(a)**	Define and explain state transition matrix and list the useful properties of it..	**07**
	(b)	State the methods of evaluation of state transition matrix & Determine the Evaluation of state transition matrix using similarity transformation(Or Using Diagonal Or Jordan form)	**07**

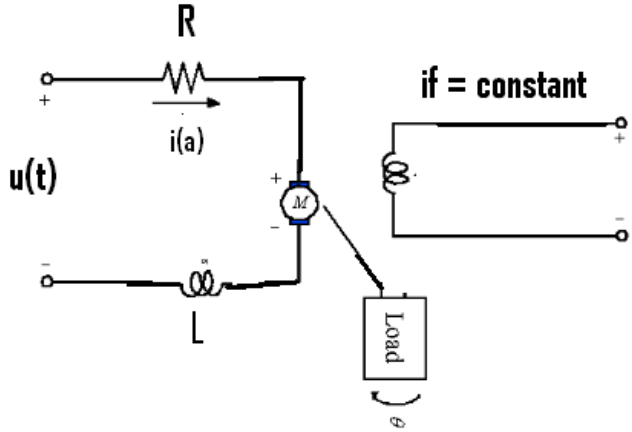

Fig. No. 1

****