Seat No.: _____ Enrolment No._____

# GUJARAT TECHNOLOGICAL UNIVERSITY

**M. E. - SEMESTER – I • EXAMINATION – WINTER 2012**

**Subject code: 711104N** **Date: 10-01-2013**

**Subject Name: Modeling, Simulation and Computer Application**

**Time: 02.30 pm – 05.00 pm** **Total Marks: 70**

## Instructions:

1. **Attempt all questions.**
2. **Make suitable assumptions wherever necessary.**
3. **Figures to the right indicate full marks.**

| | | | |
|---|---|---|---|
| **Q.1** | **(a)** | Explain – What is system modeling and simulation? Give any two examples to strengthen your answer. | **07** |
| | **(b)** | Explain static and dynamic systems using suitable practical examples. | **07** |
| **Q.2** | **(a)** | Give a physical model of (i) an automobile and (ii) its suspension system. Write only system equations for the suspension system. | **07** |
| | **(b)** | Give transfer function form of a second order differential equation representing a damped system. | **07** |
| | | **OR** | |
| | **(b)** | Describe Monte Carlo simulation technique with a suitable example. | **07** |
| **Q.3** | **(a)** | For the system as shown in figure 1, make a state variable model, write system equations and get transfer function form. | **07** |
| | **(b)** | Classify system variables and write their significance. | **07** |
| | | **OR** | |
| **Q.3** | **(a)** | For the system shown in figure 2, write statespace representation. Excitation, F is given to the mass M1. | **07** |
| | **(b)** | Classify different models. Explain the importance of each model keeping in view their characteristics. | **07** |
| **Q.4** | **(a)** | What are different simulation tools available? Give the basic features that are required in any simulation tool. | **07** |
| | **(b)** | How will you model a DC motor for predicting its performance? Write system equations and give a MATLAB program for the same. | **07** |
| | | **OR** | |
| **Q.4** | **(a)** | Make a model of any one thermo-mechanical system. | **07** |
| | **(b)** | Describe system concept of Automobile control system for tank level control. | **07** |
| **Q.5** | **(a)** | Explain RC circuit and its importance. Write a program for showing the effect of circuit parameters. Give resembling mechanical system. | **07** |
| | **(b)** | For the truck trailer system shown in figure 3, write system equations and hence get only the transfer function form, if mass of truck is M1 | **07** |
| | | **OR** | |
| **Q.5** | **(a)** | Explain the method of modeling a DC motor. Write down system equations and get a transfer function of the system. | **07** |
| | **(b)** | With the help of MATLAB program explain, importance of each parameters, the RLC circuit and make a model to simulate a second order system. | **07** |

**********

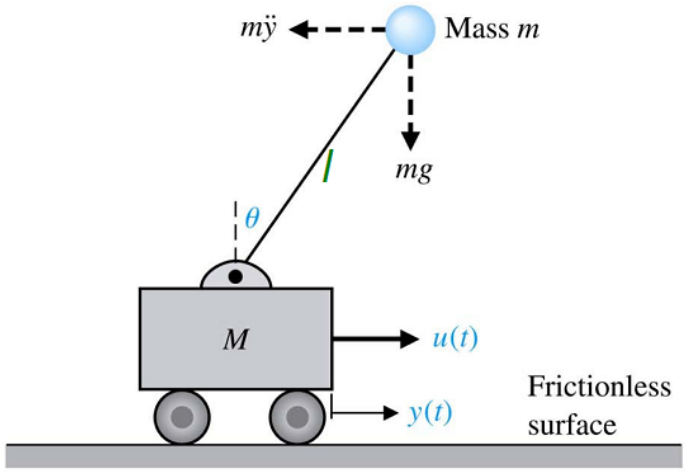


Figure – 1 [Q-3 (a)]

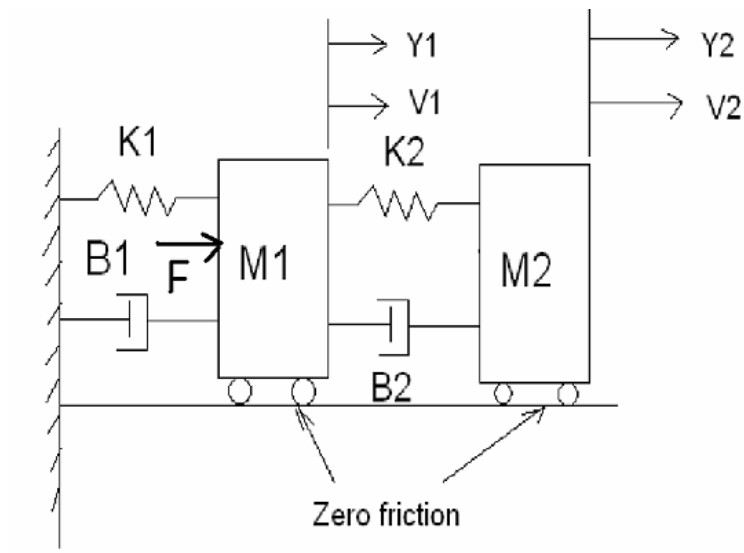


Figure – 2 [Q-3 (a) OR]

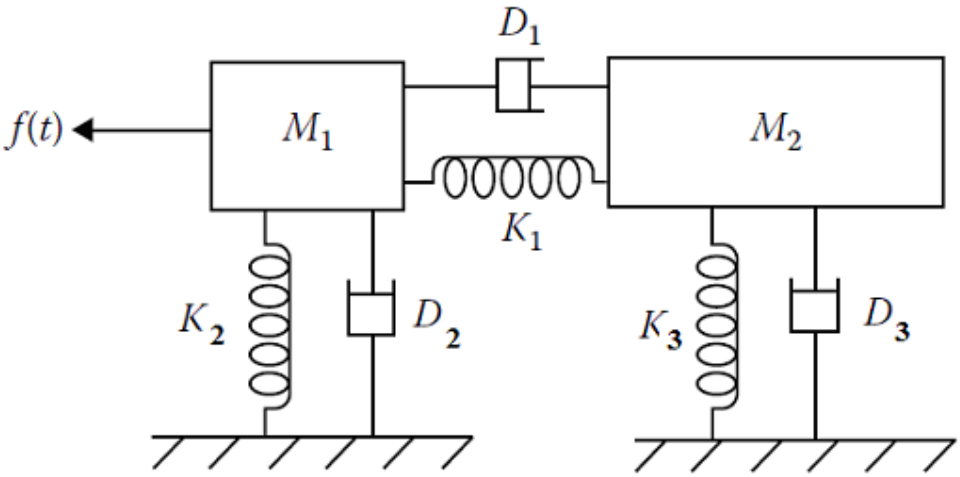


Figure – 3 [Q-5 (b)]