Seat No.: _____ Enrolment No._____

GUJARAT TECHNOLOGICAL UNIVERSITY

M. E. - SEMESTER – I • EXAMINATION – WINTER 2012

Subject code: 714705 **Date: 11-01-2013**

Subject Name: Finite Element Procedures in Engineering

Time: 02.30 pm – 05.00 pm **Total Marks: 70**

Instructions:

1. **Attempt all questions.**
2. **Make suitable assumptions wherever necessary.**
3. **Figures to the right indicate full marks.**

Q.1 **(a)** Explain the following terms related to a Finite Element Problem **07**

1. Finite element
2. Discretization
3. Degree of freedom

(b) Name the three methods used for deriving the element stiffness matrix and element equations. Briefly describe each method. **07**

Q.2 **(a)** Explain the general steps and applications of Finite Element Method. **07**

(b) Use the principle of minimum potential energy to solve for the spring problems shown in below figure. Plot the total potential energy for variations in the displacement of the free end of the spring to determine the minimum potential energy. Observe that the displacement that yields the minimum potential energy also yields the stable equilibrium position. **07**

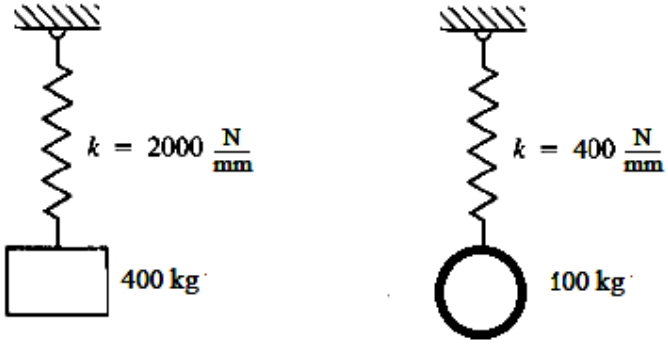

OR

(b) Using direct stiffness approach find the nodal displacements, forces in each element and the reactions for the spring assemblage shown in below figure. **07**

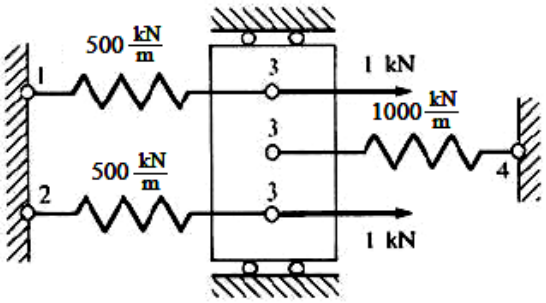

Q.3 **(a)** Consider the following displacement function for the two noded bar element : $u = a + b\,x^2$. **07**

Is this a valid displacement function? Discuss why or why not.

(b) For the plane truss supported by spring at node 1, shown in below figure find the nodal displacements and stresses in each element. Let E = 210 GPa and A=5.0 x 10^{-4} m^2 for both truss elements. **07**

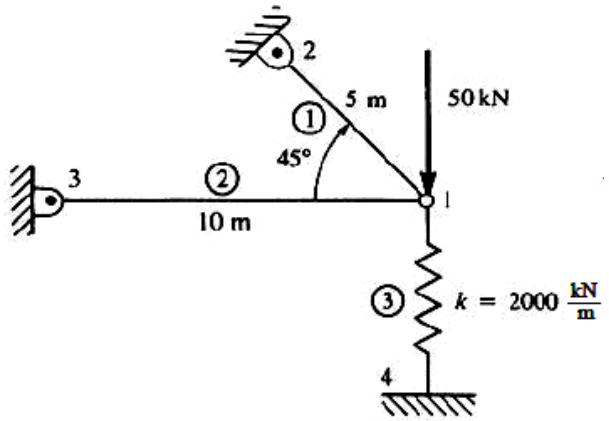

OR

Q.3 **(a)** Explain the guidelines for selecting the approximation function for displacement. **07**

(b) For the truss shown in the below figure compute the horizontal and vertical displacements of node 1 and stresses in each element. Let E = 210 GPa and A=4.0 x 10^{-4} m^2 for all truss elements. **07**

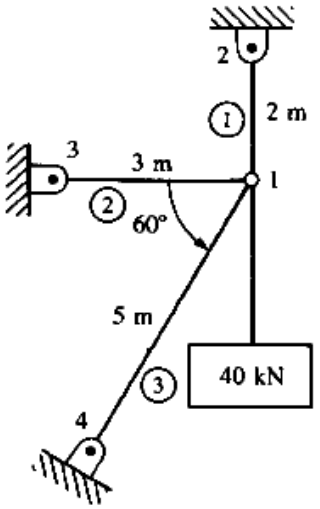

Q.4 **(a)** Differentiate between spring, bar and beam elements from general and application point of view. **07**

(b) For the below shown beam find the displacements and slopes at the nodes, forces in each element and reactions. Also sketch the shear force and bending moment diagrams. **07**

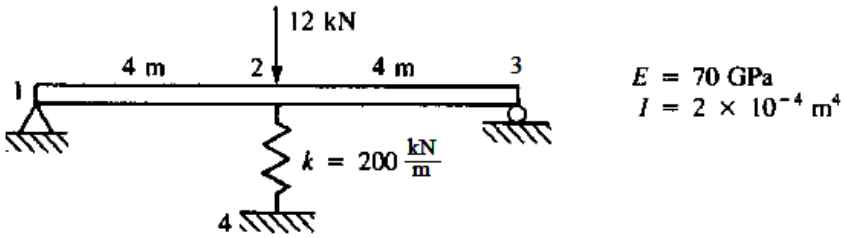

OR

Q.4 **(a)** Discuss the types of shape functions associated with different types of elements. **07**

(b) For the below shown beam find the displacements and slopes at the nodes, forces in each element and reactions. **07**

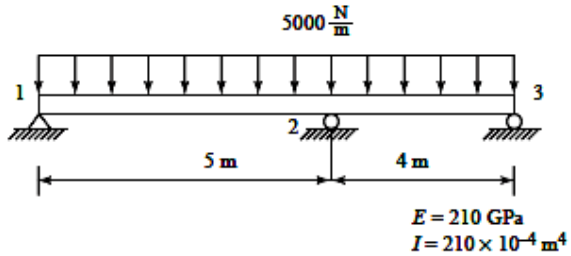

Q.5 **(a)** Explain the basic concepts of Plane stress and Plane strain giving suitable examples. **07**

(b) Find the nodal displacements and the element stresses including principal stresses due to load shown for the thin plate. Use E = 210 GPa, ν = 0.3 and t = 5mm. Assume plane stress condition. **07**

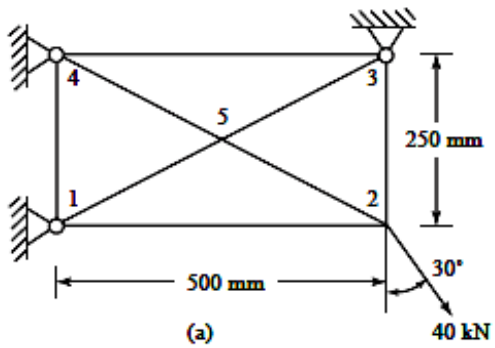

OR

Q.5 **(a)** Explain the following types of elements **07**

1. Constant Strain Triangle
2. Linear Strain Triangle

(b) For the one dimensional bar shown in below figure discretized into three elements, find the lumped and consistent mass matrices. Let the bar properties be E,ρ and A throughout the bar. **07**

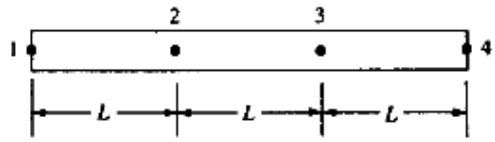

****