Seat No.: _____ Enrolment No._____

GUJARAT TECHNOLOGICAL UNIVERSITY

M. E. - SEMESTER – II • EXAMINATION – WINTER • 2013

Subject code: 1720803 **Date: 31-12-2013**

Subject Name: Robotic Engineering

Time: 10.30 am – 01.00 pm **Total Marks: 70**

Instructions:

1. **Attempt all questions.**
2. **Make suitable assumptions wherever necessary.**
3. **Figures to the right indicate full marks.**

Q.1 **(a)** What is Automation? Categorize different type of industrial automation. Compare them using sketch and list advantages of each. **07**

(b) Draw wrist assembly of a robot. Define the following terms: Pitch, Roll & Yaw. How many degrees of freedom can a wrist have? What is the purpose of these degrees of freedom? **07**

Q.2 **(a)** Derive the expression for ZYZ- Euler angles $(\theta_1, \theta_2, \theta_3)$. State the use of such representations. Determine the orientation matrix R corresponding to Euler angles [15˚, -35˚, 52˚]. **07**

(b) Draw a neat sketch of "BELOW" and "ABOVE" configuration of RR-manipulator. It is desired to determine the values to which the angles θ_1 and θ_2 must be set in order to achieve a certain point in space for the manipulator using inverse kinematics. The length of joint 1, L_1=300.5mm, the length of joint 2, L_2=252.45mm. The point Pw which the robot must achieve is defined by the coordinates x=395.5mm and y=320.05 mm. Determine the angles θ_1 and θ_2 required to achieve the point P_w in configuration. **07**

OR

(b) Explain the following terminologies in regard to robotics: **07**

- Redundant Manipulator
- Degeneracy
- Dexterity
- Degree of freedom
- Load carrying capacity
- Work envelope
- Speed of response

Q.3 **(a)** Obtain the forward kinematic equation of a 4-DoF SCARA robot shown below using DH Parameters. **07**

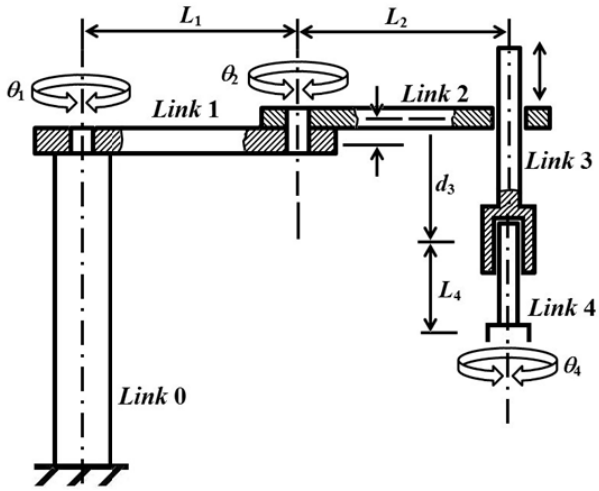

(b) Name some contact and non-contact type of sensors. Define sensitivity and linearity in regard to sensors. What are the essential components of sensors? **07**

OR

Q.3 **(a)** Explain robot control system using diagram. Highlight PID controller usage in robot motion control system. **07**

(b) Which are major factors affecting the accuracy of robots. Differentiate accuracy and repeatability using sketch. **07**

Q.4 **(a)** Figure shows the linkage mechanism and dimensions of a gripper used to handle a work part for machining operation. The gripper force is determined to be 150N. Determine the actuating force F_a applied to the plunger. **07**

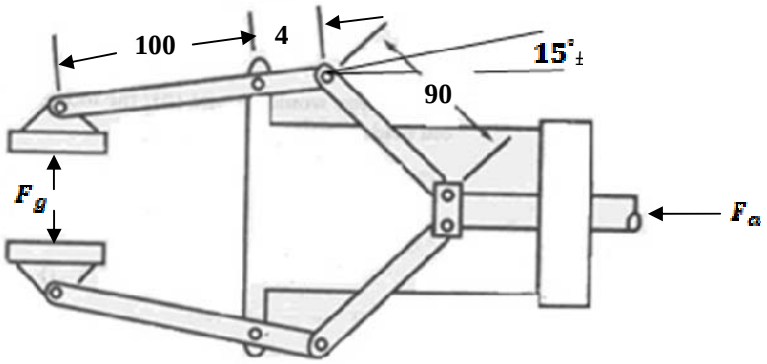

Note: Assume suitable data if any.

(b) Compare the following drives used in robots: **07**

a) Electric drives and Hydraulic drives

b) Hydraulic drives and pneumatic drives

OR

Q.4 **(a)** Draw a block diagram of typical robotic vision system. Explain image processing in brief and specify complex tasks that can be performed by a good vision system. **07**

(b) Explain Lagrangian dynamics approach with suitable example. How does this approach differ from Newton-Euler approach? **07**

Q.5 **(a)** Differentiate between ON-line and OFF-line robot programming. Name any three robot programming languages widely used by industrial manipulators. What is purpose of dead man switch in teach pendants. **07**

(b) What is compliance? State three types of compliance required to ease out assembly with neat sketch. Which are the various methods of providing compliance to the peg. **07**

OR

Q.5 **(a)** Enlist robot cell layouts. Compare "Robot centered cell" and "Inline robot cell". **07**

(b) Enlist gripper design considerations in terms of part and performance specifications. **07**

****