Seat No.: _____ Enrolment No._____

GUJARAT TECHNOLOGICAL UNIVERSITY

M. E. - SEMESTER – II • EXAMINATION – WINTER • 2013

Subject code: 1720901 **Date: 24-12-2013**

Subject Name: Finite Element Method

Time: 10.30 am – 01.00 pm **Total Marks: 70**

Instructions:

1. **Attempt all questions.**
2. **Make suitable assumptions wherever necessary.**
3. **Figures to the right indicate full marks.**

Q.1 **(a)** State the advantages of Finite Element Analysis over other numerical analysis methods. **04**

(b) Find the displacements at nodes, stresses in members, and reactions at supports for the truss shown in figure 1. The Young's modulus $E = 200 \times 10^9$ N/m^2 and cross sectional area of all elements is 100 mm^2. **10**

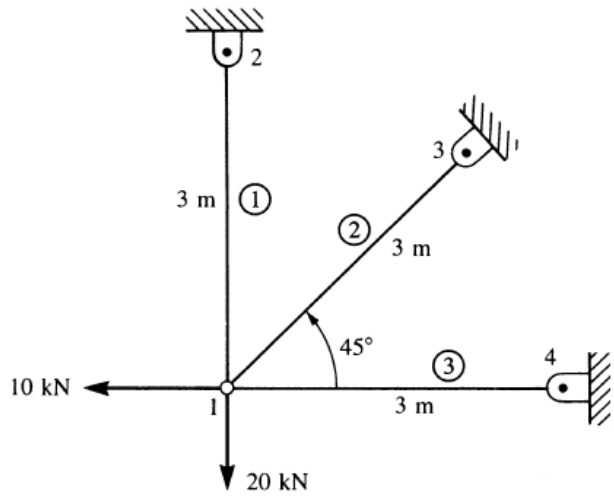

Figure 1

Q.2 **(a)** The bar shown in figure 2 is subjected a temperature rise of 40 ºC in addition to a point load of P_2 = 200 kN. Determine the nodal displacements. Take E = 200 GPa, $\alpha = 11.7 \times 10^{-6}$ per ºC. **07**

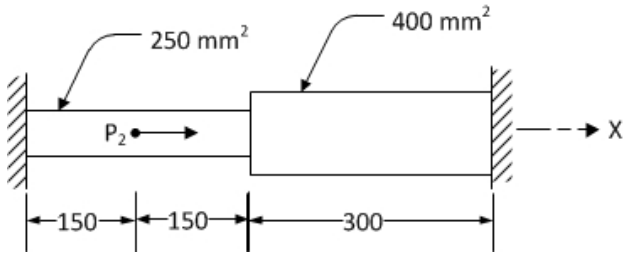

Figure 2

(b) Find the displacements and the reaction force at fixed supports for the spring system shown in figure 3 using minimum potential energy principle. Given: k_1 = 40 N/mm, k_2 = 60 N/mm, k_3 = 30 N/mm, k_4 = 100 N/mm, P_2 = 300 N, P_4 = 500 N. **07**

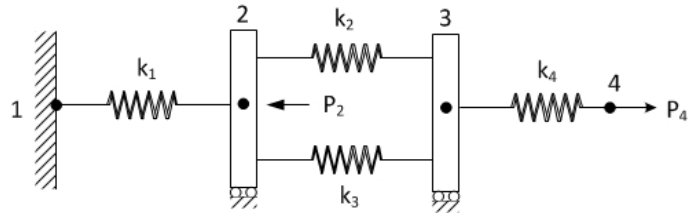

Figure 3

OR

(b) For the rod shown in figure 4, find the displacements at points 2 and 3 using the minimum potential energy principle. **07**

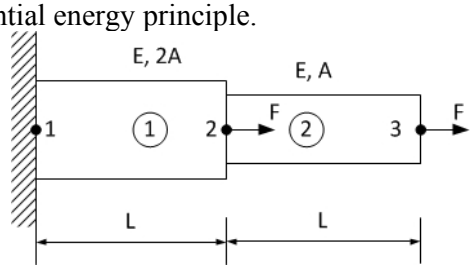

Figure 4

Q.3 **(a)** Differentiate between a bar element and a truss element. Write the stiffness matrix for each. **04**

(b) For a tapered bar of uniform thickness of 10mm as shown in figure 5, find the displacements at the nodes by forming into two element model. The bar has a mass density ρ = 7800 Kg/m^3, the young's modulus E = 200 GPa. In addition to self weight, the bar is subjected to a point load P= 1000 N at its centre. Also determine the reaction forces at the support. **10**

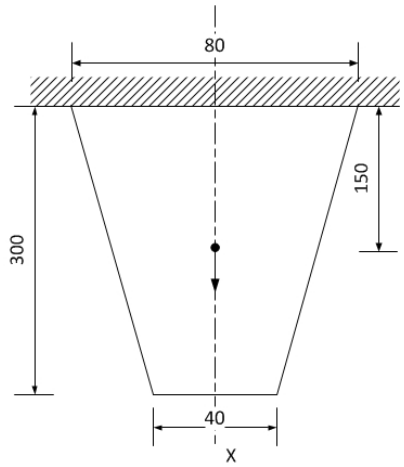

Figure 5

OR

Q.3 **(a)** Explain the following symmetry conditions: **06**

Reflection (ii) Rotational (iii) Translational

(b) Develop a FEA model for each of the followings specifying the boundary condition, loading condition and type of element. **08**

i) A thin plate with hole subjected to inplane loading
ii) An octagonal pipe with circular hole subjected to internal pressure
iii) Long cylinder subjected to internal pressure
iv) A flywheel

Q.4 **(a)** What are the ways by which a 3-dimensional problem can be reduced to a 2-D problem? **04**

(b) Analyze the beam shown in figure 7 for nodal displacements. Determine the **10**

rotations at the supports. Given: E=200 GPa and I=4x10^{-6} m^4

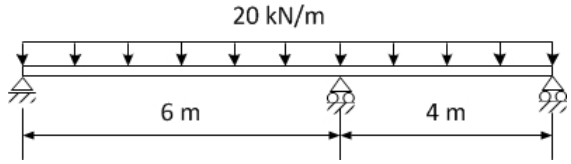

Figure 7

OR

Q.4 **(a)** Explain the elimination method and penalty method of imposing boundary conditions. Comment on the two methods. **04**

(b) For the beam shown in figure 8, calculate the nodal displacement. Given: E=200 GPa and I=4x10^{-6} m^4 **10**

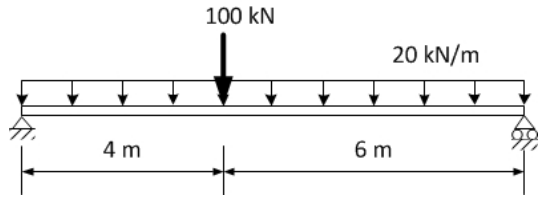

Figure 8

Q.5 **(a)** Plot the variation of shape function N_1, N_2 and N_3 for three noded bar element. Consider three noded bar element shown in figure 9 and determine the displacement at point P. **06**

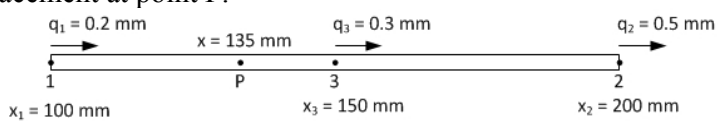

Figure 9

(b) An axial load P = 300 kN is applied to the composite block shown in figure 10. Determine the stress in each material. Take E_1 = 70 GPa and E_2 = 105 GPa. **08**

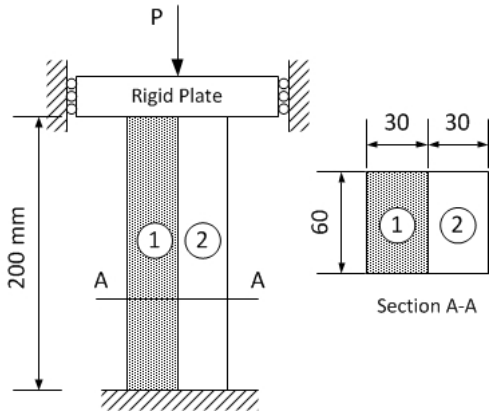

Figure 10

OR

Q.5 **(a)** Write short notes on: **06**

(a) Effect of element aspect ratio on accuracy

(b) Numbering nodes for band width minimization

(b) Derive the elemental stiffness matrix and load vector for a bar element subjected to body load, surface load and point load. **08**

****