Seat No.: _____ Enrolment No._____

GUJARAT TECHNOLOGICAL UNIVERSITY

M. E. - SEMESTER – II • EXAMINATION – WINTER • 2013

Subject code: 1720902 **Date: 27-12-2013**

Subject Name: Geometrical Dimensioning and Tolerancing

Time: 10.30 am – 01.00 pm **Total Marks: 70**

Instructions:

1. **Attempt all questions.**
2. **Make suitable assumptions wherever necessary.**
3. **Figures to the right indicate full marks.**

Q.1 **(a)** Convert this drawing from true position tolerancing to plus and minus tolerancing. Which mode of tolerance is better? Justify your answer. **07**

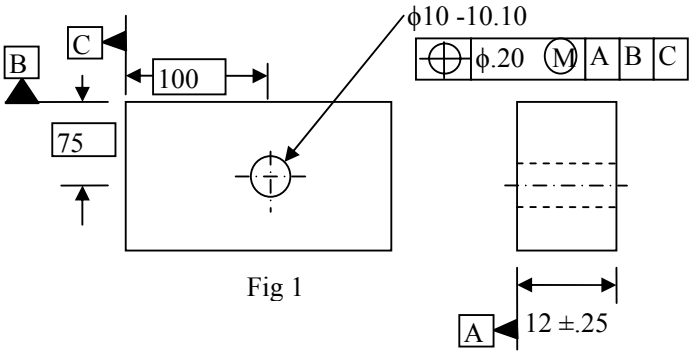

Fig 1

(b) Giving suitable examples, explain how datum's are simulated? Are three datum's always necessary for part orientation? If yes, why? If no, why not? **07**

Q.2 **(a)** Why does the order of precedence of datum's make such a difference in feature orientation? Give neat sketches to justify your answer. **07**

(b) Calculate the minimum wall thickness for the following cases. **07**

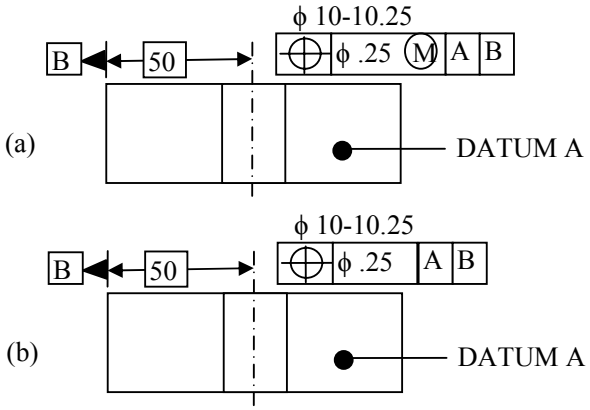

Fig 2

OR

(b) With the help of suitable examples describe the tolerance zone for (i) angularity control (ii) position control **07**

Q.3 **(a)** Calculate the value of 'xx', in the following case. Take minimum wall thickness required to meet the function as 2 mm **07**

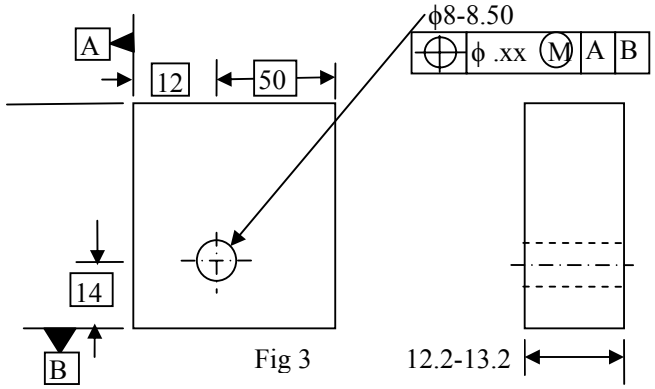

Fig 3

(b) With the help of suitable examples interpret the following terms in the context of GD&T (i) straightness (ii) circularity **07**

OR

Q.3 **(a)** Answer the following questions with reference to the part produced in figure 4 (b). (a) Where is the centreplane of the part? (b) What is the size of the part, not including the slot size? (c)What is the slot size? (d)How far is the slot centerplane from the top of the part? (e) How far is the slot centerplane from the bottom of the part? **07**

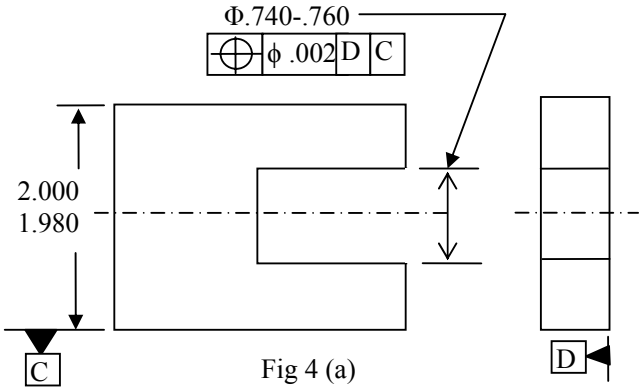

Fig 4 (a)

As Measured

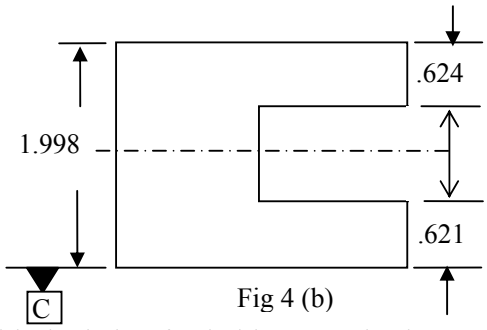

Fig 4 (b)

(b) With the help of suitable examples interpret the following terms in the context of GD&T (i) Cylindricity (ii) Perpendicularity **07**

Q.4 **(a)** Actual hole size # 1 = 10.25 **07**

2 = 10.10

3 = 10.05

Hole Positions: Axis # 1= 74.075 from datum C

= 24.95 from datum B

Axis # 2= 75.025 from datum C

= 75.025 from datum B

Axis # 3= 24.90 from datum C

= 74.90 from datum B

Prepare a paper gauge and check, whether the part is acceptable or not? If not, what modifications are required to accept it?

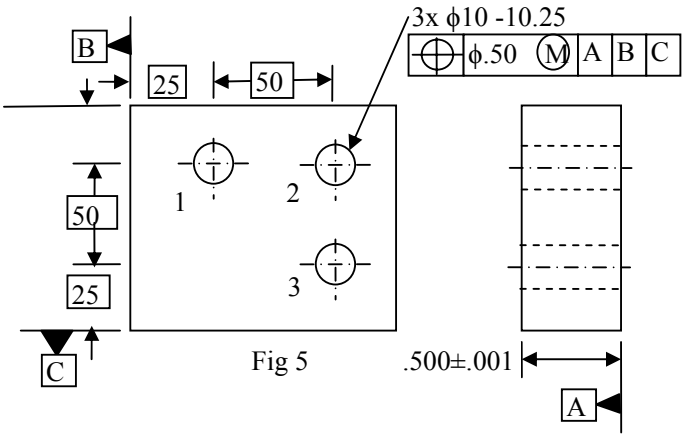

Fig 5

(b) What do you mean by virtual condition? Give suitable example and explain its significance in GD&T, in case of feature control frames with MMC modifier & LMC modifier. **07**

OR

Q.4 **(a)** With the help of suitable example explain, how resultant condition differs with MMC & LMC modifiers **07**

Q.4 **(b)** What is the tolerance zone shape of profile of a line? What is the tolerance zone shape of profile of a surface? How is profile tolerance designated as bilateral or unilateral? **07**

Q.5 **(a)** List down any three datum simulators and schematically show the datums simulated by any two among them, in the context of 3-2-1 location concept **07**

(b) "MMC ensures assembly, whereas LMC ensures minimum wall thickness" evaluate this statement giving suitable examples. **07**

OR

Q.5 **(a)** Explain the 3-2-1 location concept in the context of a cylinder. Give neat sketches. **07**

(b) With the help of suitable example, explain RFS. Also explain when both RFS and MMC represents the same boundary **07**

****