Seat No.: _____ Enrolment No._____

GUJARAT TECHNOLOGICAL UNIVERSITY

M. E. - SEMESTER – II • EXAMINATION – WINTER • 2013

Subject code: 1724103 **Date: 31-12-2013**

Subject Name: Error Control Coding In Communication

Time: 10.30 am – 01.00 pm **Total Marks: 70**

Instructions:

1. **Attempt all questions.**
2. **Make suitable assumptions wherever necessary.**
3. **Figures to the right indicate full marks.**

Q.1 **(a)** Write a short note on Error control strategies. **07**

(b) Consider the linear block code with the codeword defined by **07**

$U=m_1+m_2+m_4+m_5,m_1+m_3+m_4+m_5,m_1+m_2+m_3+m_5,m_1+m_2+m_3+m_4,m_1,m_2,m_3,,m_4,m_5$

(i) Show the generator matrix.

(ii) Show the parity-check matrix.

(iii) Find n, k and d_{min}.

Q.2 **(a)** Prove that a linear block code with a minimum distance d_{min} can detect up to (d_{min} -1) errors in each code vector and can correct up to [(d_{min}-1)/2] errors where[(d_{min}-1)/2] denotes the largest integer no greater than (d_{min}-1)/2. **07**

(b) Consider a (15,11) cyclic code generated by $g(x) = 1+x+x^4$. Devise a feedback shift register encoder circuit. Illustrate the encoding procedure with the message vector 10010110111 by listing the state of the registers. **07**

OR

(b) The generator polynomial for a (15,7) cyclic code is **07**

$$G(x) = 1+x^4+x^6+x^7+x^8$$

(i) Find the code-vector is systematic form for the message $d(x) = x^2+x^3+x^4$

(ii) Assume that the first and last bit of the code vector v(x) for $d(x) = x^2+x^3+x^4$ suffer transmission errors. Find syndrome of v(x).

Q.3 **(a)** Explain operation of meggitt decoder of cyclic code with block diagram. **07**

(b) Consider a (3,1,2) convolution code with $g^{(1)}$=(011), $g^{(2)}$=(110) and $g^{(3)}$=(101). **07**

(i) Draw the encoder block diagram

(ii) Find the generator matrix

(iii)Find the code-vector corresponding to the information sequence d=10001

OR

Q.3 **(a)** What are RS codes? How are they formed? List the applications of RS codes. **07**

(b) For the (3,2,1) encoder shown in figure, find code-word C for input sequences of $d^{(1)}$=101 and $d^{(2)}$ = 110 using **07**

(i) Time domain approach

(ii) Transform domain approach

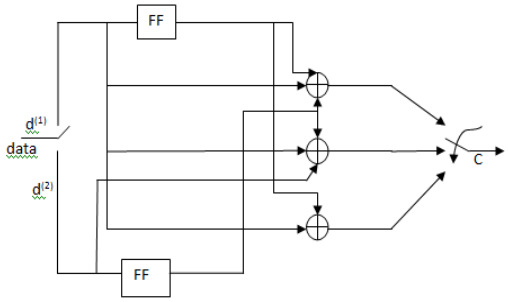

Q.4	**(a)**	Write short note on interleaved codes	**07**
	(b)	For the (7,4) single error correcting cyclic code, the generator polynomial $g(x)=1+x+x^3$,find all the 16 code vectors of the cyclic code both in nonsystematic and systematic form.	**07**

OR

Q.4	**(a)**	What do you understand by state diagram and code tree of a convolution encoder? Explain clearly.	**07**
	(b)	Using RS code circuit to encode the symbols {2,6,7} with a (7,3) R-S code in systematic form. Show the resulting codeword in binary form. Verify the encoding results by evaluating the codeword polynomial at the roots of the (7,3) R-S generated polynomial g(x).	**07**

Q.5	**(a)**	Explain recursive systematic convolution code.	**07**
	(b)	Explain procedure of R-S code decoding using suitable example.	**07**

OR

Q.5	**(a)**	Write a short note on MAP decoding algorithm.	**07**
	(b)	Write short note on PG-LDPC code	**07**

****