Seat No.: _____ *Enrolment No._____*

GUJARAT TECHNOLOGICAL UNIVERSITY

M. E. - SEMESTER – I • EXAMINATION – WINTER • 2013

Subject Code: 712602N **Date: 26-12-2013**

Subject Name: CMOS Circuit Design-I

Time: 10.30 am – 01.00 pm **Total Marks: 70**

Instructions:

1. **Attempt all questions.**
2. **Make suitable assumptions wherever necessary.**
3. **Figures to the right indicate full marks.**

Q.1 **(a)** Draw the equivalent CMOS inverter circuit for Low to High transition and high to low transition. Also prove that if CMOS inverter is switched ON and OFF f times per second, the dynamic power consumption is **07**

$$Pdyn = C_L V_{DD}^2 f$$

(b) Discuss importance and impact of scaling in VLSI and compare full scaling and fixed voltage scaling in detail. **07**

Q.2 **(a)** Discuss Manchester carry –chain adder. **07**

(b) Explain carry save multiplier. **07**

OR

(b) Discuss Dynamic Threshold scaling (DTS) to reduce power consumption. **07**

Q.3 **(a)** Draw source follower circuit and its small signal equivalent circuit. Derive voltage gain A_V and output resistance R_{OUT}. **07**

(b) As shown in circuit (a), calculate the voltage gain if C1 acts as an ac short at the frequency of interest. **07**

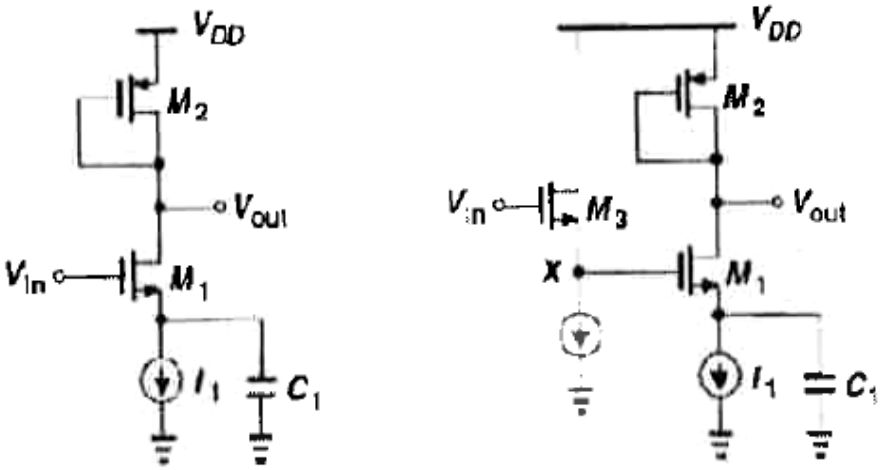

(a) (b)

I) What is the maximum dc level of the input signal for which M1 remains saturated?

II) To accommodate an input dc level close to Vdd, the circuit is modified as shown in (b). What relationship among the gate – source voltages of M1-M3 guarantees that M1 is saturated?

OR

Q.3 **(a)** Discuss Multipole Systems for stability and frequency compensation.. **07**

(b) Explain any two second order effects in detail. **07**

Q.4	**(a)**	Discuss Gilbert cell Why Gilbert cell consumes a greater voltage headroom than a simple differential pair?	**07**
	(b)	Discuss Qualitative analysis of differential pair.	**07**
		OR	
Q.4	**(a)**	Discuss frequency response of common source stage.	**07**
	(b)	Draw high –frequency model of a cascade stage and explain.	**07**
Q.5	**(a)**	Explain the following: (1) Basics of current mirror (2) Folded cascode	**07**
	(b)	Discuss basic cascode current mirrors.	**07**
		OR	
Q.5	**(a)**	Discuss simple op-amp topologies and cascade op-amps in brief.	**07**
	(b)	Discuss following performance parameters of op-amp: (1) Small Signal Bandwidth (2) Large Signal Bandwidth (3) Output Swing	**07**

****