Seat No.: _____ Enrolment No._____

GUJARAT TECHNOLOGICAL UNIVERSITY

M. E. - SEMESTER – III • EXAMINATION – WINTER • 2013

Subject code: 734701 **Date: 26-11-2013**

Subject Name: Simulation and Modeling

Time: 10.30 am – 01.00 pm **Total Marks: 70**

Instructions:

1. **Attempt all questions.**
2. **Make suitable assumptions wherever necessary.**
3. **Figures to the right indicate full marks.**

Q.1 **(a)** Give a brief classification of different types of system models based on classification criterion and types of model equations. **07**

(b) Explain the different types of variables and elements used in Mechanical, Electrical, Thermal and Fluid systems with proper nomenclature. **07**

Q.2 **(a)** The six-element system shown in Fig. is a simplified representation of a vibrating spring–mass assembly (k_1, m_1, b_1) with an attached vibration absorber, subjected to a displacement input x_1. The object is to develop a mathematical model capable of relating the motions x_2 and x_3 to the input displacement x_1. **07**

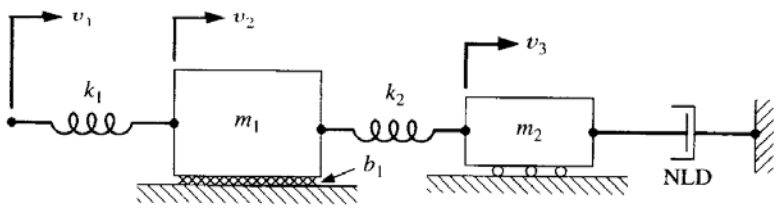

(b) List out the steps to be followed in a Linearization procedure. **07**

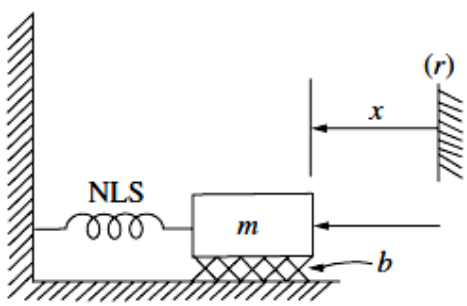

In the mechanical system shown in the above Figure relationship between the force exerted by the spring and the change of the springs length measured from the spring's relaxed position has been approximated mathematically by the following nonlinear equation:

$$F_{NLS} = f_{NL}(x) = 2.5\sqrt{x}.$$

Obtain a linearized mathematical model of the system that approximates the system dynamics in a small vicinity of the normal operating point determined by the average value of the input force, $F_i = 0.1N$

OR

(b) Develop expressions for Δ_2 and Δ_3, the displaced references resulting from the action of gravity on the mass m_2 when $x_1 = 0$. Write the necessary and sufficient set of describing equations for this system. Combine these equations to remove unwanted variables and develop the system differential equation relating x_3 to x_1. **07**

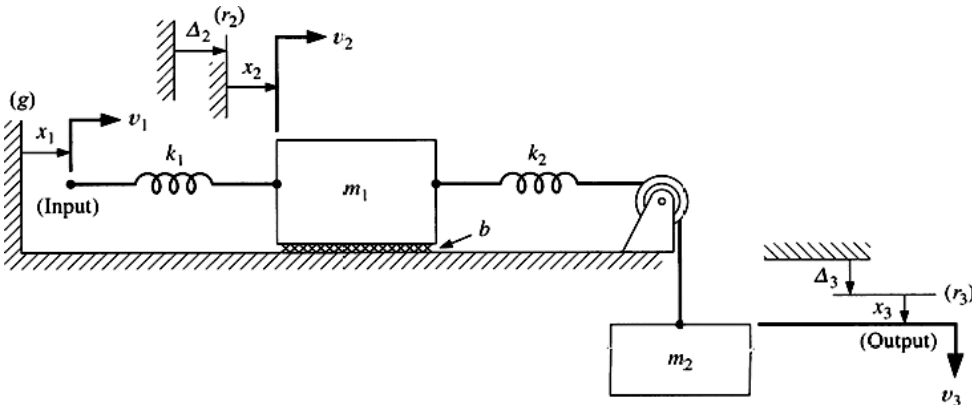

Q.3 **(a)** Differentiate between an input output model and a state model. Also explain in brief (i) State variable (ii) state vector. Derive a state model of type 1 for the figure shown below. Force F_1 (t) is the input variable and displacement x_2(t) as the output variable. The symbols s_{e1} and s_{e2} are the static equilibrium positions of masses m_1 and m_2. **07**

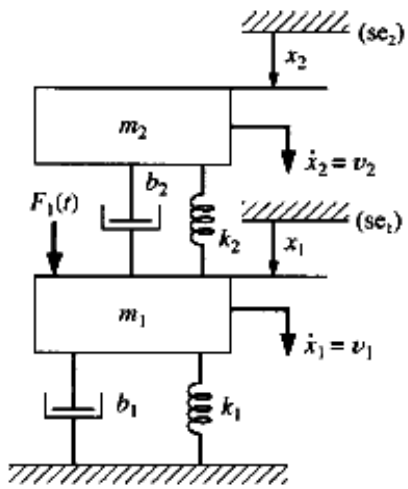

(b) Prove that the free response of a first order system is given by **07**

$$y(t) = y_0 e^{-(a_0/a_1)t}$$

OR

Q.3 **(a)** Derive a complete set of state-model equations for the mechanical rotational system shown in Fig. Select the following state variables: **07**

(a) T-type and A-type variables,

(b) One variable and its derivative.

Use torque T_i (t) as the input variable and angular displacement θ_l (t) as the input variable in each model.

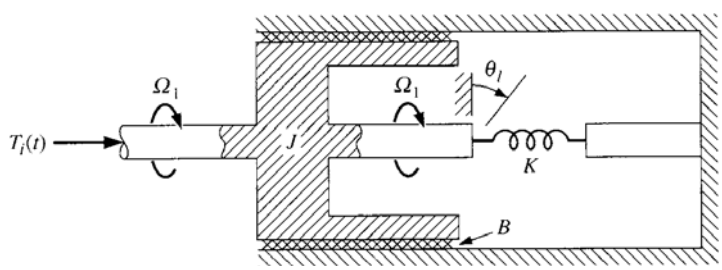

(b) An ideal unit impulse function can be defined but cannot be physically generated. Evaluate. **07**

Q.4 **(a)** Use Euler's method to obtain a numerical solution of the differential equation 4(dx/dt) + x =4 over a period of time from 0 to 12 s. The initial condition is $x(0) = 10$, and the system time constant is 4s. Take a time step of 0.5s. **07**

(b) Solve **07**

$$y'' - 10y' + 9y = 5t, \qquad y(0) = -1 \quad y'(0) = 2$$

OR

Q.4 **(a)** Solve the problem mentioned in Q.4(a) above using Runga Kutta method. **07**

(b) Solve **07**

$$\frac{d^3x}{dt^3} + 2\frac{d^2x}{dt^2} - \frac{dx}{dt} - 2x = 4 + e^{2t}$$

x(0) = 1 x'(0) = 0 x''(0) = -1

Q.5 **(a)** Explain the parameters that define the run time control of simulation of a dynamic system. **07**

(b) Find the input-output differential equation relating e_o to e_s for the simple RLC circuit shown below. **07**

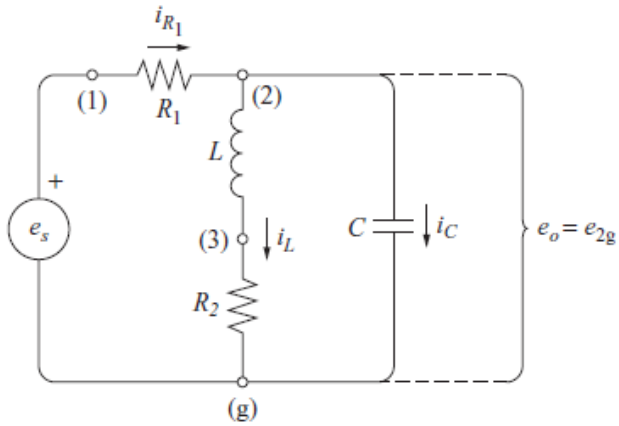

OR

Q.5 **(a)** Explain the significance of simulating a dynamic system. What type of models can be considered for simulation? What are the components of simulation? **07**

(b) Develop the input output differential equation relating e_0 to i_s for the given circuit. **07**

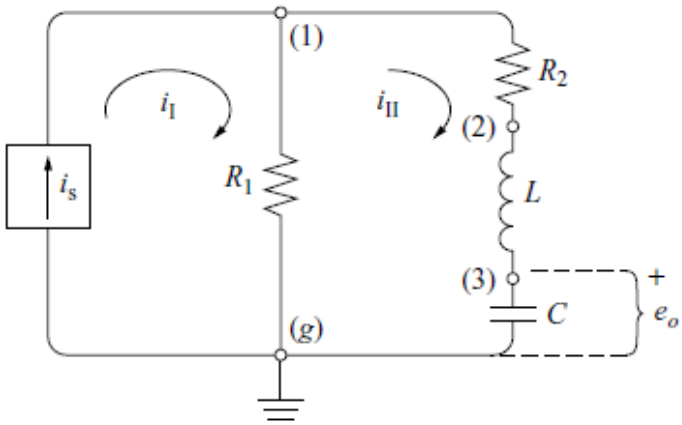

****