Seat No.: _____ Enrolment No._____

GUJARAT TECHNOLOGICAL UNIVERSITY

P.D.D.C. Sem- II Remedial Examination Nov / Dec. 2010

Subject code: X20901 **Subject Name: Circuits & Networks**

Date: 29/ 11/ 2010 **Time: 10.30 am – 01.00 pm**

Total Marks: 70

Instructions:

1. **Attempt all questions.**
2. **Make suitable assumptions wherever necessary.**
3. **Figures to the right indicate full marks.**

Q.1	**(a)**	State and Explain Thevenin's Theorem and Norton's Theorem with suitable Example.	**06**
	(b)	Explain the following, **(I)** Linear Network **(II)** Passive Network **(III)** Active network **(IV)** Bilateral and Unilateral Element **(V)** Node and Mesh **(VI)** Ideal Voltage Source	**06**
	(c)	How inductor and Capacitor will have at t=0 and t=∞.Draw equivalent networks.	**02**
Q.2	**(a)**	Determine the Numerical values of Current and i_x by using source transformation technique as shown in the **fig.A.**	**07**
	(b)	State and Explain Kirchoff's current Law and Kirchoff's voltage law.	**07**
		OR	
	(b)	Explain the rules for source transformation technique.	**07**
Q.3	**(a)**	Derive the expression for Y-Parameters for the Parallel connection of 2-Two port Networks.	**07**
	(b)	What are Y-Parameters and Z-Parameters? Derive the Expression for Z-Parameters in terms of Y-parameters and vice – versa.	**07**
		OR	
Q.3	**(a)**	Explain the concept of the complex frequency.	**05**
	(b)	Obtain the transform representation of an inductor with initial current $i(0^-)$ in term of (i) Impedance (II) Admittance.	**05**
	(c)	For the R-L-C circuit shown in **fig.G.** Determine the transform impedance Z(s).	**04**
Q.4	**(a)**	Explain in brief the concept of initial conditions.	**06**
	(b)	The network shown in **Fig-B** has the switch opened at t=0.Solve for v, $\frac{dv}{dt}$ and $\frac{d^2v}{dt^2}$ at $t=0^+$ if I= 1A and R=100Ω and L=1H.	**08**
		OR	
Q.4	**(a)**	Define the following terms, (I) Link (II) Graph (III) Tree (IV) Node (V) Branch	**06**
	(b)	In the Network shown I **fig-C** Draw the orients graph and write the (I) Incidence matrix (II) Cutset matrix and (III) Triset matrix.	**08**

Q.5 **(a)** In the network Shown in **fig-D** the switch K is closed at t=0 with the network previously energized. Find i_1 (t) and i_2 (t). **07**

(b) State and explain Maximum Power Transform Theorem when load is complex with veriable resistance and fixed reactance. **07**

OR

Q.5 Write any two of the following **14**

a) Prove AB-BC=1.
b) Poles and Zeros of network functions.
c) Define and Prove the Initial value and Final value Theorem.
d) Explain dot conversion rules for coupled circuits.

****

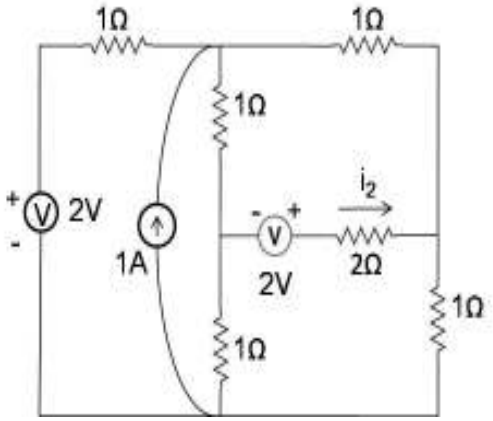

Q-2(a); Fig.A

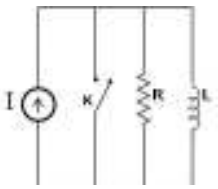

Q-4(b); Fig.B

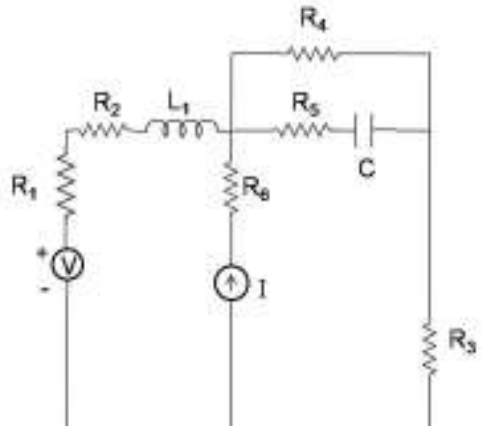

Q-4(b);Fig.C

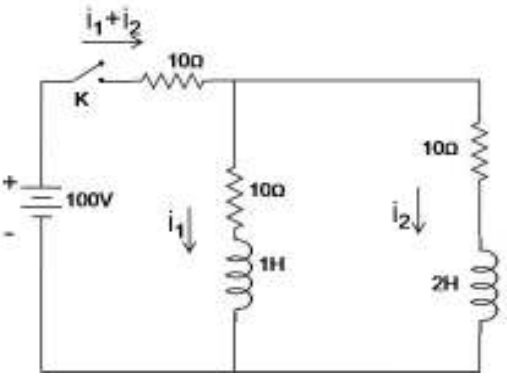

Q-4(a); Fig-D

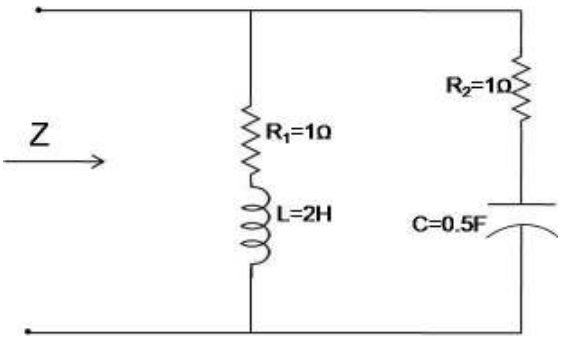

Q-3(c);Fig.G