Seat No.: _____ **Enrolment No._____**

GUJARAT TECHNOLOGICAL UNIVERSITY

PDDC- SEMESTER–III - EXAMINATION – SUMMER 2017

Subject Code: X30903 **Date:31/05/2017**

Subject Name: Control Theory

Time: 02:30 PM to 05:00 PM **Total Marks: 70**

Instructions:

1. **Attempt all questions.**
2. **Make suitable assumptions wherever necessary.**
3. **Figures to the right indicate full marks.**

Q.1	**(a)**	Compare open loop and close loop control system	**07**
	(b)	Explain force to current analogy with proper example.	**07**
Q.2	**(a)**	Using block diagram reduction techniques find the close loop transfer function of the system given in fig.1	**07**
	(b)	Using Mason's gain formula, find the gain of following signal flow graph shown in fig.2	**07**
		OR	
	(b)	Determine the Transfer Function of the network shown in fig.3	**07**
Q.3	**(a)**	Describe liquid level system and derive transfer function of liquid level system with interaction.	**07**
	(b)	Find out the stability of the system by Routh criterion if the characteristic equation is given by, $S^4 + S^3 + 2S^2 + 2S + 3 = 0$.	**07**
		OR	
Q.3	**(a)**	Using suitable diagram derive the transfer function of Thermometer placed in water bath as a Thermal system.	**07**
	(b)	Define: (1) Delay time, (2) rise time, (3) pick time, (4) settling time (5) Peak Overshoot (6) Absolute stability, (7) Relative stability.	**07**
Q.4	**(a)**	Plot the root locus for the unity feedback system with $G(S) = \frac{K}{S(S+6)(S+9)}$.	**07**
	(b)	Explain the advantages of state space over classical approaches & also define State variable, State-space & state-vector.	**07**
		OR	
Q.4	**(a)**	Explain procedure to obtain (i) asymptotes (ii) centroid of asymptotes and (iii) breakaway points in root locus. Also explain significance of the root locus.	**07**
	(b)	Derive the expression for unit step response for second order control system for $0<\xi<1$.	**07**
Q.5	**(a)**	Define and explain following terms with respect to frequency response (1)Gain Margin (2) Phase Margin (3) Gain cross-over frequency (4) Phase cross-over Frequency.	**07**
	(b)	Using Nyquist plot, comment on the stability of the following system, $G(S) = \frac{1}{(1+P_1 S)(1+P_2 S)}$.	**07**
		OR	
Q.5	**(a)**	Explain the general steps for solving Bode Plot.	**07**
	(b)	Sketch the polar plot of the transfer function, $G(S) = \frac{1}{(1+P_1 S)(1+P_2 S)}$.	**07**

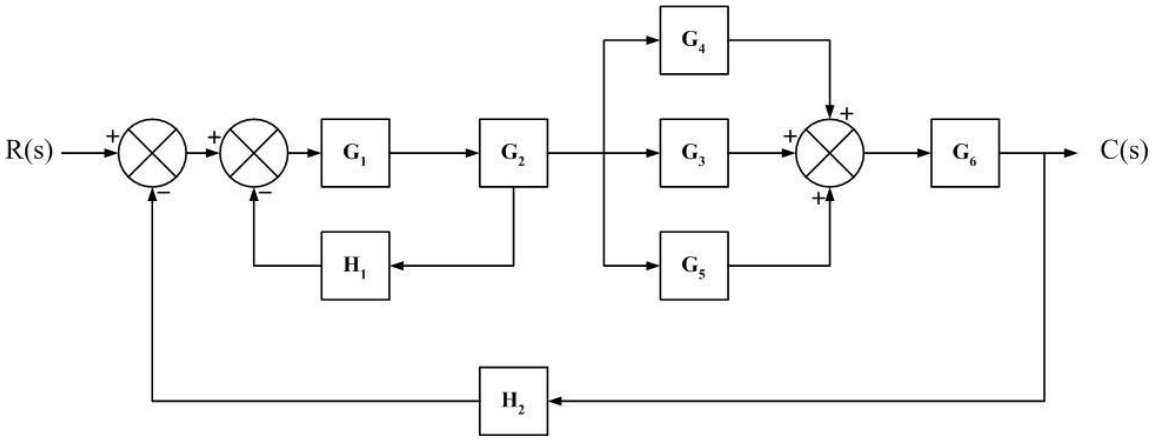

Fig. 1

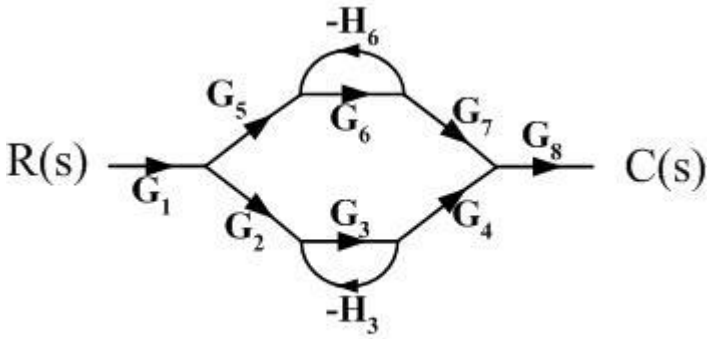

Fig.2

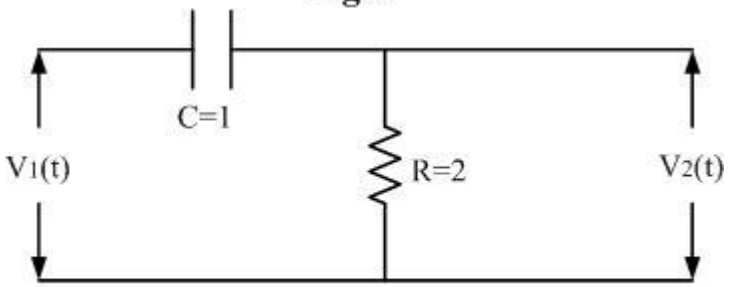

Fig. 3

****