Seat No.: _____ Enrolment No._____

GUJARAT TECHNOLOGICAL UNIVERSITY

PDDC SEMESTER VII– EXAMINATION – SUMMER 2017

Subject Code: X71904 **Date: 05/05/2017**

Subject Name: Control Engineering

Time: 02.30PM to 05.00PM **Total Marks: 70**

Instructions:

1. **Attempt all questions.**
2. **Make suitable assumptions wherever necessary.**
3. **Figures to the right indicate full marks.**

Q.1	**(a)**	With the help of suitable examples discuss open loop and closed loop control system.	**07**
	(b)	Draw equivalent mechanical and electrical system to relate force voltage or force current analogy.	**07**
Q.2	**(a)**	Define the various terms used for specifying the transient response of a control system. Explain them on the response curve of any one of test signal.	**07**
	(b)	Draw schematic block diagram for control of D.C motor and derive its transfer function.	**07**
		OR	
	(b)	What do you mean by micro-processor based digital control. What is PLC? State its industrial applications.	**07**
Q.3	**(a)**	Reduce block diagram as show in figure 1 and obtain overall transfer function	**07**
	(b)	Determine the stability of the following equation : $S^5 + S^4 + 2S^3 + 2S^2 + 3S + 5 = 0$	**07**
		OR	
Q.3	**(a)**	For figure 2 find overall transfer function. Solve using masons rule.	**07**
	(b)	With the help of a neat sketch explain the working of a pneumatic nozzle flapper amplifier and hence determine its transfer function.	**07**
Q.4	**(a)**	What are the basic components of a hydraulic system? Explain any three of them.	**07**
	(b)	Compare between hydraulic and pneumatic control system.	**07**
		OR	
Q.4	**(a)**	With a schematic diagram explain a hydraulic lift.	**07**
	(b)	What is the main function of a pressure relief valve? Explain the constructional details of a pressure relief valve with neat sketch.	**07**
Q.5	**(a)**	Write a short note on 'Digital to Analog converter'.	**07**
	(b)	Draw and explain detail block diagram of fuzzy logic controller.	**07**
		OR	
Q.5	**(a)**	Define. Rise time, Delay time, Peak time, Maximum overshoot, Steady state error.	**07**
	(b)	Explain boiler feed control system using neat sketch.	**07**

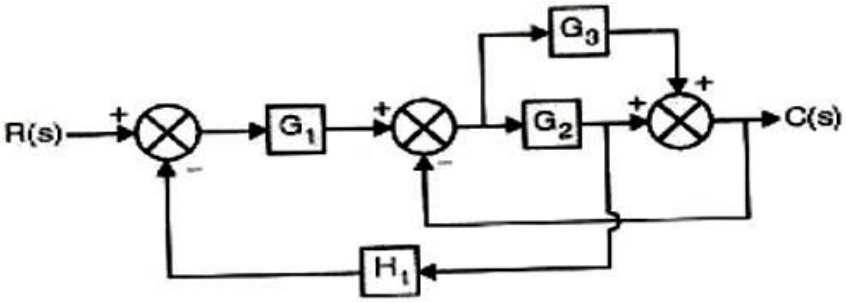

Figure.1 Q.3(a)

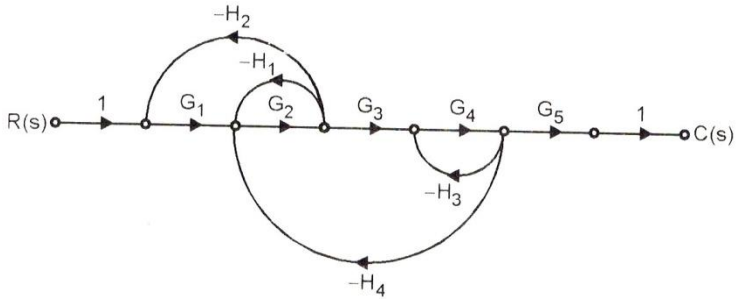

Figure.2 Q.3(a) OR

****