Seat No.: _____ Enrolment No._____

GUJARAT TECHNOLOGICAL UNIVERSITY

PDDC - SEMESTER–II • EXAMINATION – SUMMER 2013

Subject Code: X20901 **Date: 06-06-2013**

Subject Name: Circuit and Network

Time: 02.30 pm - 05.00 pm **Total Marks: 70**

Instructions:

1. **Attempt any 5 questions.**
2. **Make suitable assumptions wherever necessary.**
3. **Figures to the right indicate full marks.**

Q.1(a)	Explain Dot convention with suitable Example	07
Q.1(b)	Put suitable Dots and Write down differential equation of given mutual coupled network as shown in figure-1.	07
Q.2(a)	Derive the equivalent circuit of figure-2 with voltage source in series with resistance by using source transformation technique.	07
Q.2(b)	Explain: (i) Ideal Sources (ii) Controlled Sources.	07
Q.3(a)	State and explain Millman's theorem	07
Q.3(b)	State and explain superposition with suitable example	07
Q.4(a)	State and Explain Thevenin's Theorem and Norton's Theorem with suitable Example.	07
Q-4(b)	Explain the following, 1. Linear network 2. Passive network 3. Active network 4. Bilateral and unilateral network 5. Node and mesh 6. Super node and super mesh 7. Driving point impedance and driving point admittance	07
Q.5(a)	Explain the concept of initial conditions. Explain how inductor, capacitor and resistance behaves at initial and final condition	07
Q.5(b)	Draw the graph, tree and co-tree for the figure-3.	
Q.6(a)	What are Y-Parameters and Z-Parameters? Derive relationship between Z-parameters in terms of Y-parameters	07
Q.6(b)	What are the advantages of Laplace transformation over classify methods. Write the property of Laplace transformation.	07
Q.7(a)	Find out i(o+), di/dt (0+) d^2i/dt^2 (0+) when switch is closed for figure-4	07
Q.7(b)	Prepare a list of dual quantities encountered in electrical engineering. Give a procedure to draw the dual of network.	07

Q-1 (b) Figure-1

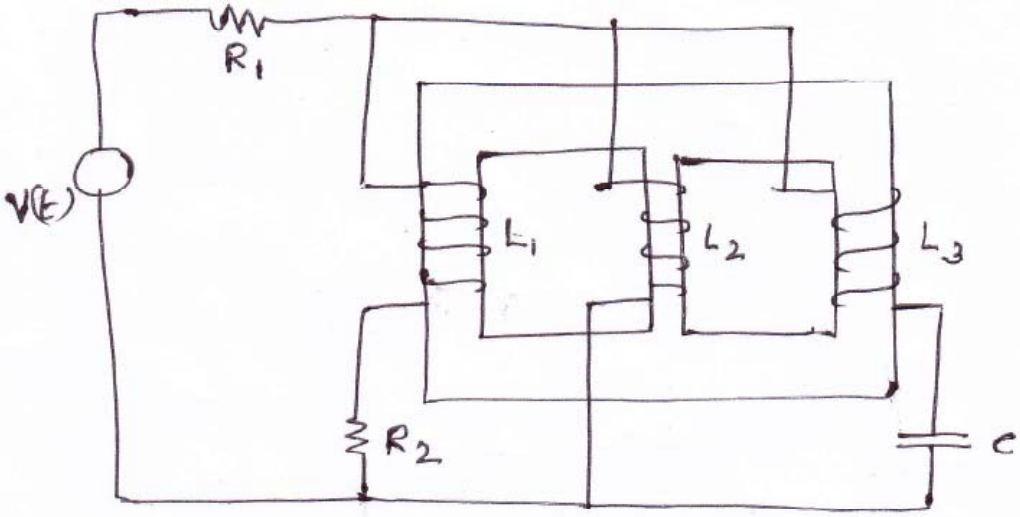

Q.2 (a) Figure : 2

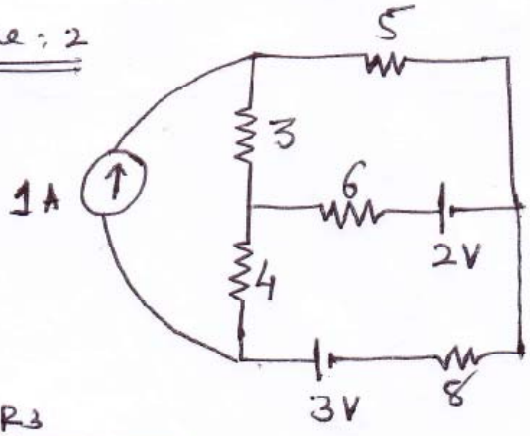

Q. 5 (b)

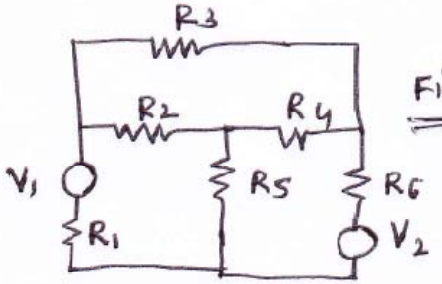

Figure : 3
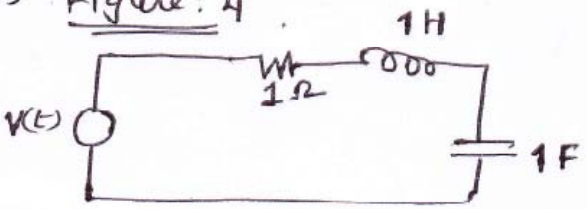
Q. 7 (a) Figure : 4