Seat No.: _____ Enrolment No._____

GUJARAT TECHNOLOGICAL UNIVERSITY

PDDC - SEMESTER–IV • EXAMINATION – SUMMER 2013

Subject Code: X41103 **Date: 10-06-2013**

Subject Name: Integrated Circuits and Applications

Time: 10.30 am - 01.00 pm **Total Marks: 70**

Instructions:

1. **Attempt all questions.**
2. **Make suitable assumptions wherever necessary.**
3. **Figures to the right indicate full marks.**

Q.1 (a) Explain peaking amplifier using op-amp in detail **07**

(b) Explain voltage to current converter with floating load using op-amp with application as diode match finder **07**

Q.2 (a) Explain differential input and differential output amplifier using op-amp in detail **07**

(b) Explain voltage follower and current to voltage converter using op-amp **07**

OR

(b) Explain instrumentation amplifier using transducer bridge and op-amp **07**

Q.3 (a) Explain integrator using op-amp in detail **07**

(b) 1) Design a differentiator to differentiate an input signal that varies in frequency from 10 Hz to about 1 kHz **07**

2) If a sine wave of 1V peak at 1000 Hz is applied to the differentiator of part (1), draw its output waveform.

OR

Q.3 (a) Explain differentiator using op-amp in detail **07**

(b) The 741C op-amp having the following parameters is connected as a noninverting amplifier, as shown fig: 1, with R_1 = 1kΩ and R_F = 10 kΩ: A=200000, R_i=2MΩ, R_o=75Ω, f_o≅5Hz, supply voltages=∓15V, and output voltage swing=∓13V. Compute the values of A_F, R_{iF}, R_{oF}, f_F, and V_{ooT} **07**

Q.4 (a) Explain operation of 555 Timer as an astable multivibrator **07**

(b) Explain Schmitt trigger in detail **07**

OR

Q.4 (a) Explain triangular wave generator using op-amp in detail **07**

(b) Explain absolute-value output circuit using op-amp in detail **07**

Q.5 (a) Explain biquad circuit in detail **07**

(b) Explain operating principle of phase locked loop **07**

OR

Q.5 (a) Explain RC-CR transformation in detail **07**

(b) Explain sallen and key circuit in detail. **07**

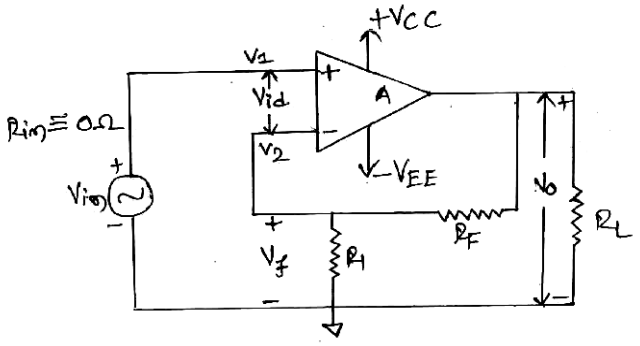

Fig: 1

****