Seat No.: _____ Enrolment No._____

GUJARAT TECHNOLOGICAL UNIVERSITY

PDDC - SEMESTER–II • EXAMINATION – SUMMER • 2014

Subject Code: X20901 **Date: 20-06-2014**

Subject Name: Circuit and Network

Time: 10:30 am – 01:00 pm **Total Marks: 70**

Instructions:

1. **Attempt any 5 questions.**
2. **Make suitable assumptions wherever necessary.**
3. **Figures to the right indicate full marks.**

Q.1	**(a)**	Define following terms clearly: (1) Linear network (2) Lumped parameter (3) Dependant source (4) Duality (5) Bilateral network (6) Passive circuit elements (7) Active circuit elements	**07**
	(b)	Explain concept of dot and its significance in magnetically coupled circuits.	**07**
Q.2	**(a)**	Explain various source transformation techniques.	**07**
	(b)	Determine currents through all voltage sources using nodal analysis (The circuit is shown in fig 1)	**07**
		OR	
	(b)	Determine currents through all voltage sources using mesh analysis (The circuit is shown in fig 1)	**07**
Q.3	**(a)**	State and explain maximum power transfer theorem.	**07**
	(b)	Determine Thevinin's and Norton's equivalent networks for the circuit shown in fig. 2.	**07**
		OR	
Q.3	**(a)**	Develop duality between Thevinin's and Norton's theorem.	**07**
	(b)	Determine all branch current in the network shown in fig. 1 using superposition theorem.	**07**
Q.4	**(a)**	Discuss applications of Laplace transformation in network analysis.	**07**
	(b)	Switch 'k' is shifted from position 1 to 2 in fig.3. at $t=0$. Determine values of i , di/dt and d^2i/dt^2 at $t=0_+$.	**07**
		OR	
Q.4	**(a)**	Discuss concept of poles and zeros in a network function.	**07**
	(b)	For the circuit shown in fig.4 obtain the current through the capacitor after the closure of the switch at t=0 using Laplace transformation.	**07**
Q.5	**(a)**	Find Z parameters for the circuit shown in fig. 5.	**07**
	(b)	What is incidence matrix? How it can be formed? Discuss its properties.	**07**
		OR	
Q.5	**(a)**	Find transmission parameters for the circuit shown in fig. 5.	**07**
	(b)	Obtain fundamental loop matrix and cut-set matrix for the graph shown in fig 6.	**07**

****

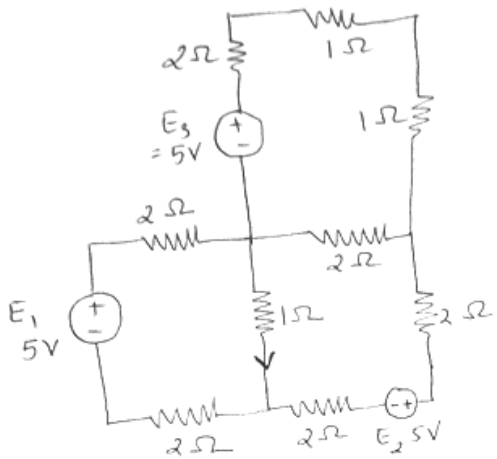

(Fig. - I)

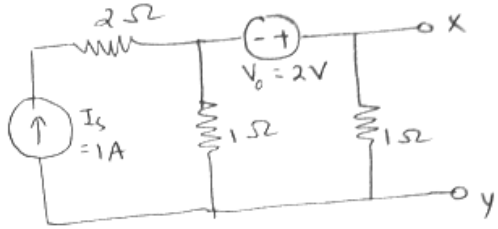

(Fig. - 2)

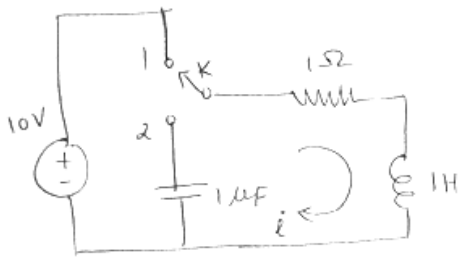

(Fig. 3)

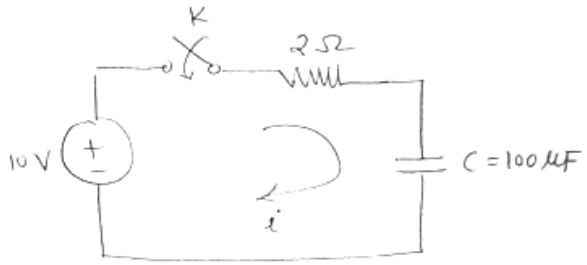

(Fig - 4)

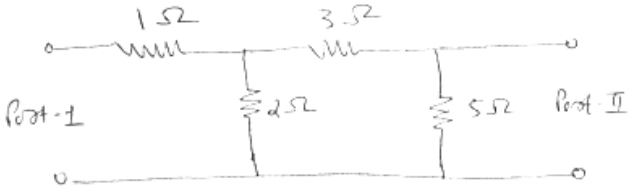

(Fig. 5)

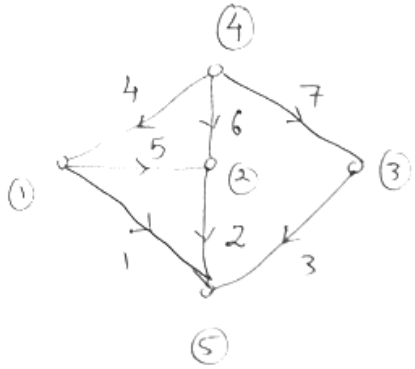

(Fig. 6).