Seat No.: _____ Enrolment No._____

GUJARAT TECHNOLOGICAL UNIVERSITY

PDDC – SEMESTER – III • EXAMINATION – SUMMER 2014

Subject Code: X30903 **Date: 24-06-2014**

Subject Name: CONTROL THEORY

Time:02:30 pm to 05:00 pm **Total Marks: 70**

Instructions:

1. **Attempt all questions.**
2. **Make suitable assumptions wherever necessary.**
3. **Figures to the right indicate full marks.**

Q.1 **(a)** Define STATE of control system & Derive the equation also explain the name & size of each matrix **07**

$$\frac{dx}{dt} = AX + BU \quad \& \quad Y = CX + DU$$

(b) Explain Force-Voltage & Force –current analogy **07**

Q.2 **(a)** Compare Open loop & close loop System & Derive the equation for transfer function for close loop system **07**

(b) Derive STATSPACE model for RLC series circuit supplied by input voltage source [ei]=Vm sin(wt) & eo=output use Fig-B **07**

OR

(b) Explain Mason's gain formula for signal flow with an example **07**

Q.3 **(a)** Derive the electrical Equivalent model from Mechanical model of Fig-A, apply Force current analogy **07**

(b) Apply Block Reduction technique & derive transfer function of Fig-C **07**

OR

Q.3 **(a)** Draw a nyquist plot for transfer function **07**

$$G(s)H(s) = \frac{K}{S * (2 + S)(S + 10)}$$

(b) Define steady state error & derive the equation for steady state error **07**

Q.4 **(a)** For given transfer function find the Value of damping ratio, natural frequency ;over shoot & Peak time **07**

$$G(s) = \frac{100}{s^2 + 15s + 100}$$

(b) Derive the relationship between steady state error & order of system, when applied step input **07**

OR

Q.4 **(a)** Explain the steps to draw root locus **07**

(b) Check the system stability using Routh's stability criteria for system having characteristic equation; **07**

$S^6+2S^5+8S^4+12S^3+16S+16=0$

Q.5 **(a)** Sketch a polar plot for following transfer function **07**

$$G(s)H(S) = \frac{1}{S * (1 + T * S)}$$

(b) Explain the advantages of state space over classical approaches & also define State variable, State-space & state-vector **07**

OR

Q.5 **(a)** Draw a bode plot for below given transfer function & derive value for gain margin & phase margin **10**

$$G(s)H(s) = \frac{80}{s(s+2)(s+20)}$$

(b) Explain various types of standard inputs used in control system **04**

Fig-A

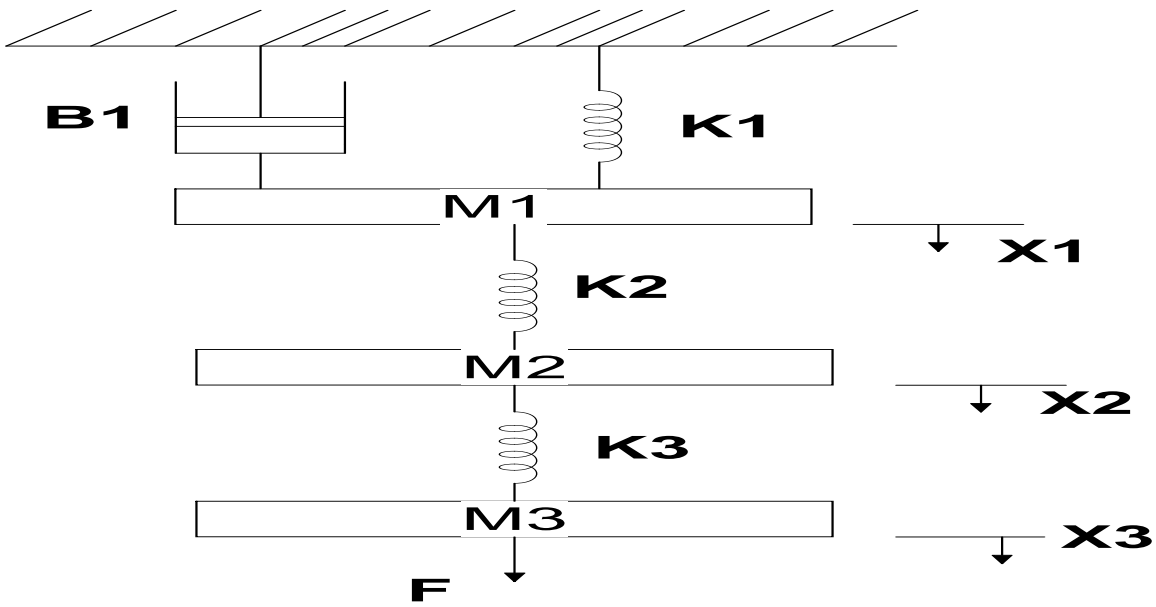

Fig-A

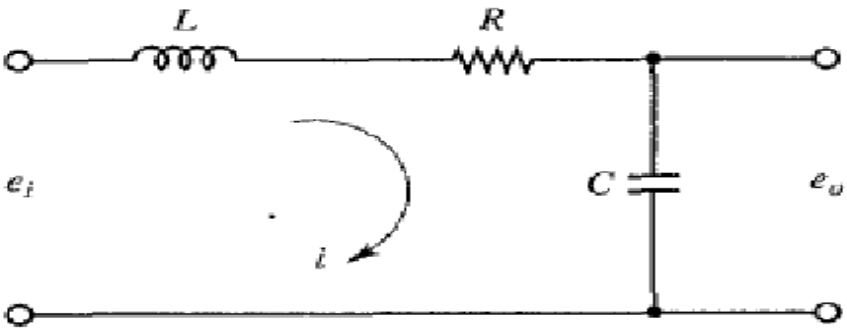

Fig-B

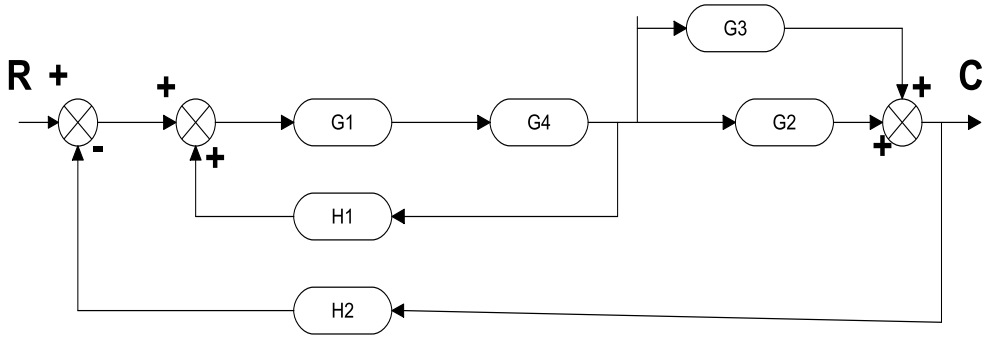

Fig-C

****