Seat No.: _____ Enrolment No._____

GUJARAT TECHNOLOGICAL UNIVERSITY

PDDC - SEMESTER–III • EXAMINATION – SUMMER • 2014

Subject Code: X 31901 **Date: 18-06-2014**

Subject Name: Fluid Mechanics

Time: 02:30 pm – 05:00 pm **Total Marks: 70**

Instructions:

1. **Attempt all questions.**
2. **Make suitable assumptions wherever necessary.**
3. **Figures to the right indicate full marks.**

Q.1 **(a)** What is capillary effect? Derive equation for capillary rise and fall. **07**

(b) Explain single column manometer with neat sketch. **07**

Q.2 **(a)** Define metacentre, and explain stability conditions for floating bodies. **07**

(b) Oil is used for lubrication between a square plate of size 1 m × 1 m and an inclined plane with angle of inclination 45° as shown in Fig. 1. The weight of the square plate is 500 N and it slides down the inclined plane with a uniform velocity of 0.5 m/s. The thickness of oil film is 1 mm. Determine the dynamic viscosity of oil. **07**

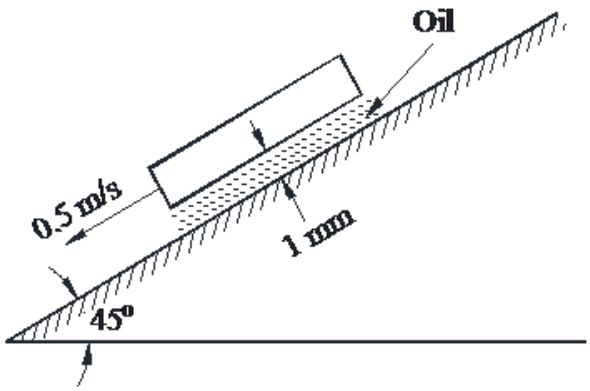

Fig. 1 (Q -2 (b))

OR

(b) Sate and prove Hydrostatic law. **07**

Q.3 **(a)** Derive an equation for total pressure and centre of pressure for vertically immersed surface. **07**

(b) A circular plate of diameter 1m is immerged in a liquid of specific gravity 0.9 with its plane making an angle of 40° with the horizontal. The centre of the plate is at a depth of 2 m below the free surface. Calculate (i) total pressure force on one side of the plate, and (ii) location of the centre of pressure. **07**

OR

Q.3 **(a)** A pipe A 350 mm in diameter, branches into two pipes (B and C) of diameters 200 mm and 150 mm respectively. If the average velocity in pipe A is 2 m/s, determine (i) Discharge through pipe A, and (ii) velocity in pipe C if the average velocity in pipe B is 1.5 m/s. **07**

(b) Explain rotational and irrotational flow with neat sketches. **07**

Q.4 **(a)** Derive an equation for the discharge through a Triangular notch with usual notations. **07**

	(b)	The resistance (R) experienced by a partially submerged body depends upon the velocity (V), length of body (l), density of fluid (□), dynamic viscosity of fluid (□) and gravitational acceleration (g). Find a dimensionless expression for resistance (R) by using Buckingham's □-Theorem of dimensional analysis.	**07**

OR

Q.4	**(a)**	A horizontal Venturimeter with inlet diameter 160 mm and throat diameter 80 mm is employed to measure the discharge of water. The differential manometer connected to the inlet gives reading of 150 mm of mercury. Determine the rate of flow if the co-efficient of discharge is 0.98.	**07**
	(b)	Derive an expression for velocity distribution for viscous flow between two fixed parallel plates. Also sketch the velocity distribution and shear stress distribution for this flow.	**07**
Q.5	**(a)**	Explain capillary tube viscometer with neat sketch.	**07**
	(b)	Prove that velocity of a sound wave in a compressible fluid is given by $C = \sqrt{\gamma RT}$	**07**

OR

Q.5	**(a)**	Derive Darcy Weisbach equation for the co-efficient of friction in pipes	**07**
	(b)	A particular aircraft flies at altitude 15 km, its speed is 150 km/hr less than that speed when it flies at sea level at same mach number. Calculate the mach number at which the aircraft flies. The temperatures of air at sea level and at 15 km above sea level are 20° C and -52° C respectively. Assume R = 0.287 kJ/kg K, and □□= 1.4.	**07**

****